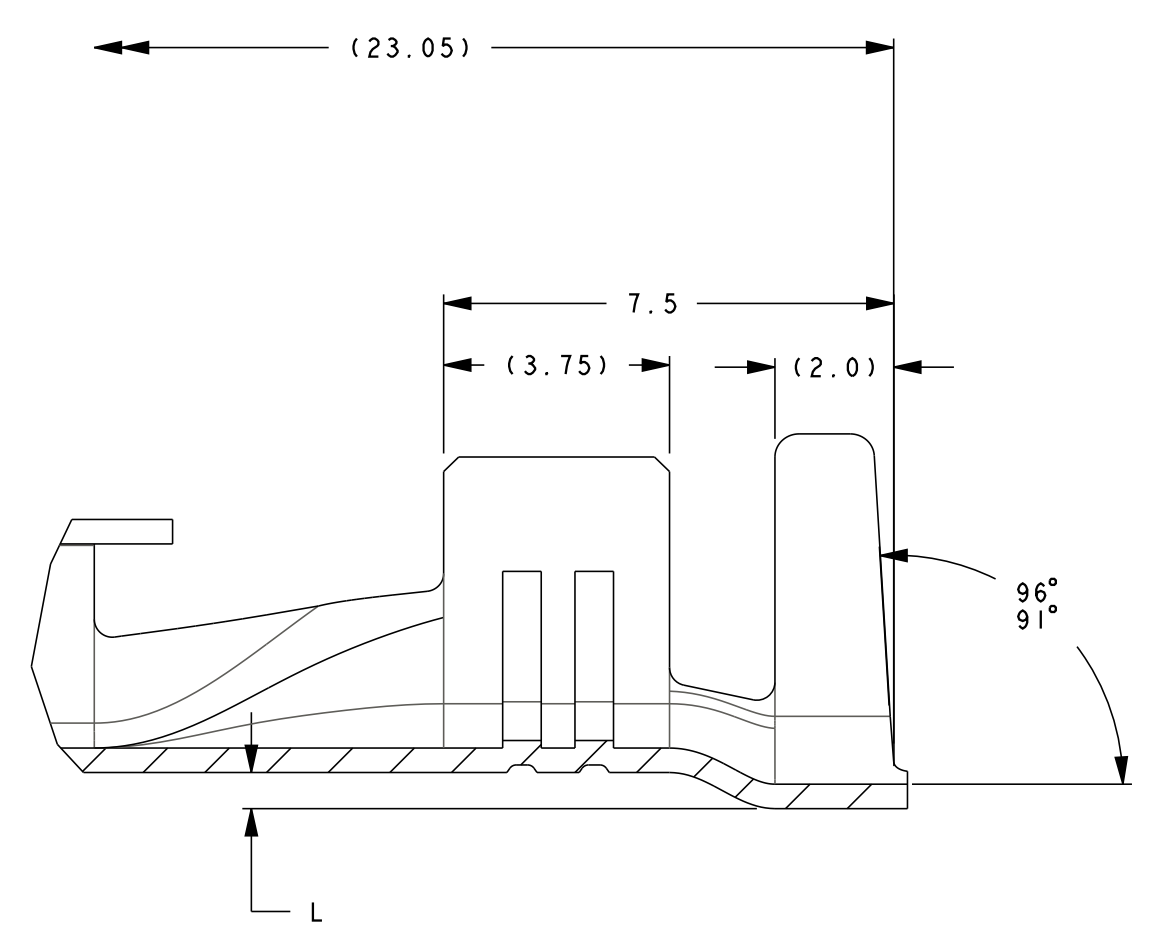
(23.05)
7.5
(3.75)
(2.0)
96°
91°
L

PARTIAL VIEW
SECTION A-A

UNSEALED CONSTRUCTION

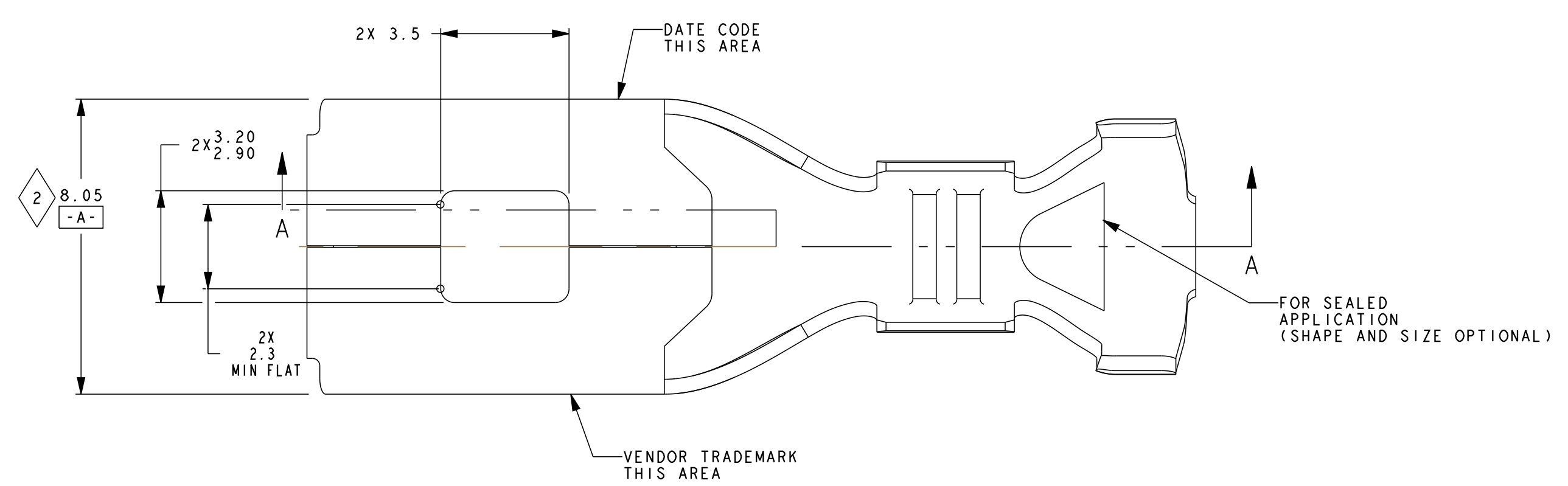
2X 3.5
DATE CODE THIS AREA
2X 3.20 2.90
2 8.05
-A-
A
2X 2.3 MIN FLAT
A
FOR SEALED APPLICATION (SHAPE AND SIZE OPTIONAL)
VENDOR TRADEMARK THIS AREA

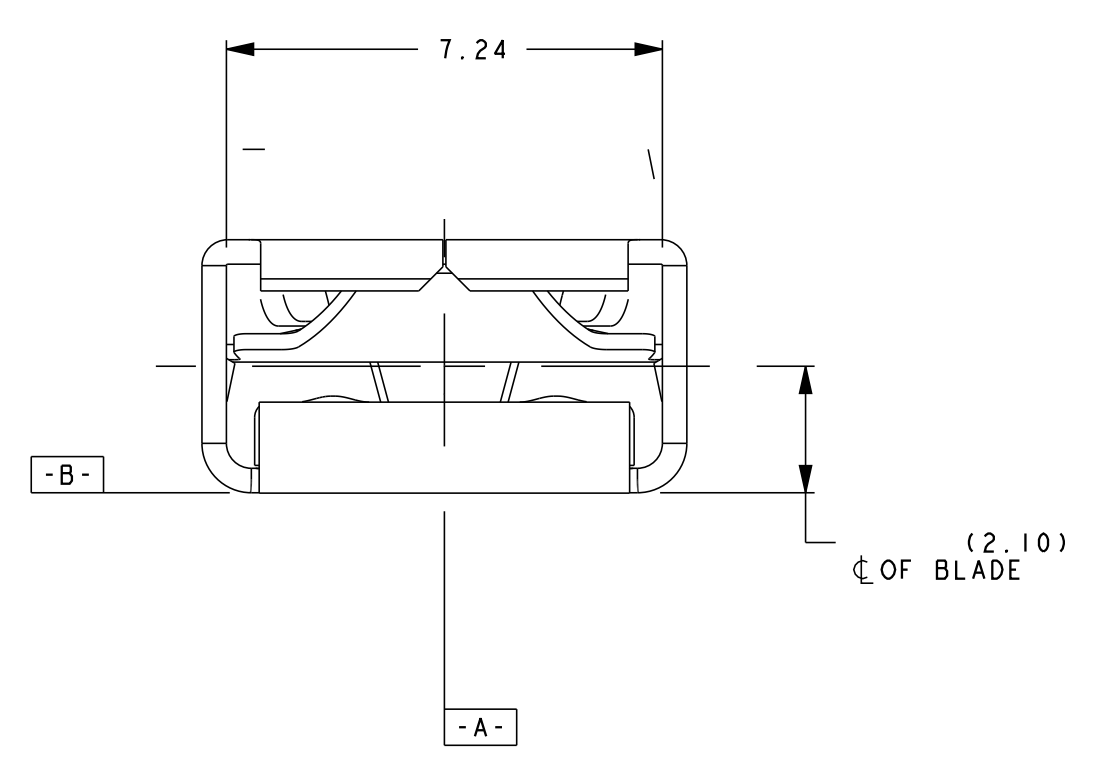
7.24
-B-
(2.10)
℄ OF BLADE
-A-

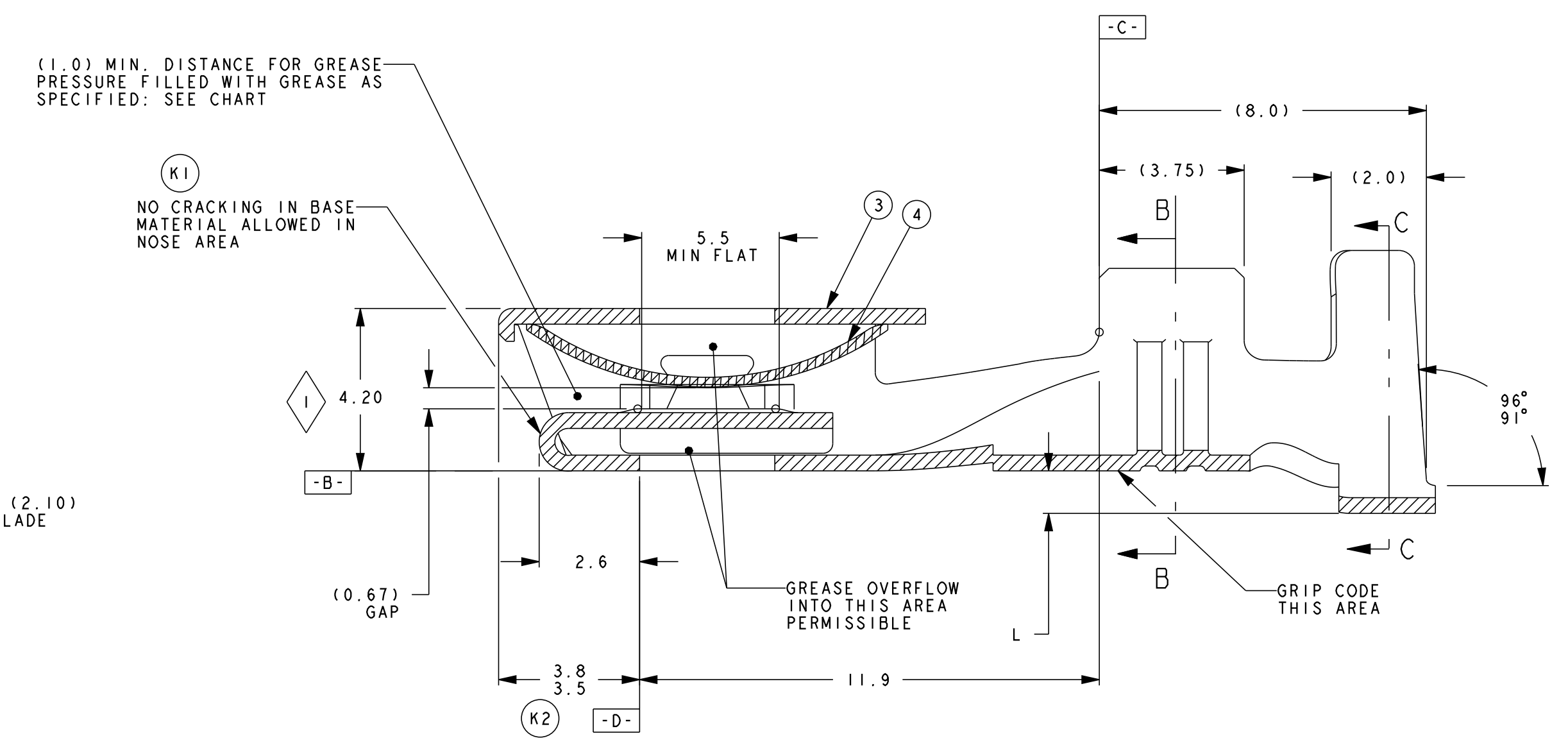
-C-
(1.0) MIN. DISTANCE FOR GREASE PRESSURE FILLED WITH GREASE AS SPECIFIED: SEE CHART
K1
NO CRACKING IN BASE MATERIAL ALLOWED IN NOSE AREA
5.5 MIN FLAT
3
4
(8.0)
(3.75)
(2.0)
B
C
1
4.20
-B-
96°
91°
(0.67) GAP
2.6
GREASE OVERFLOW INTO THIS AREA PERMISSIBLE
L
B
C
GRIP CODE THIS AREA
3.8 3.5
11.9
K2
-D-

SECTION A-A
SEALED CONSTRUCTION

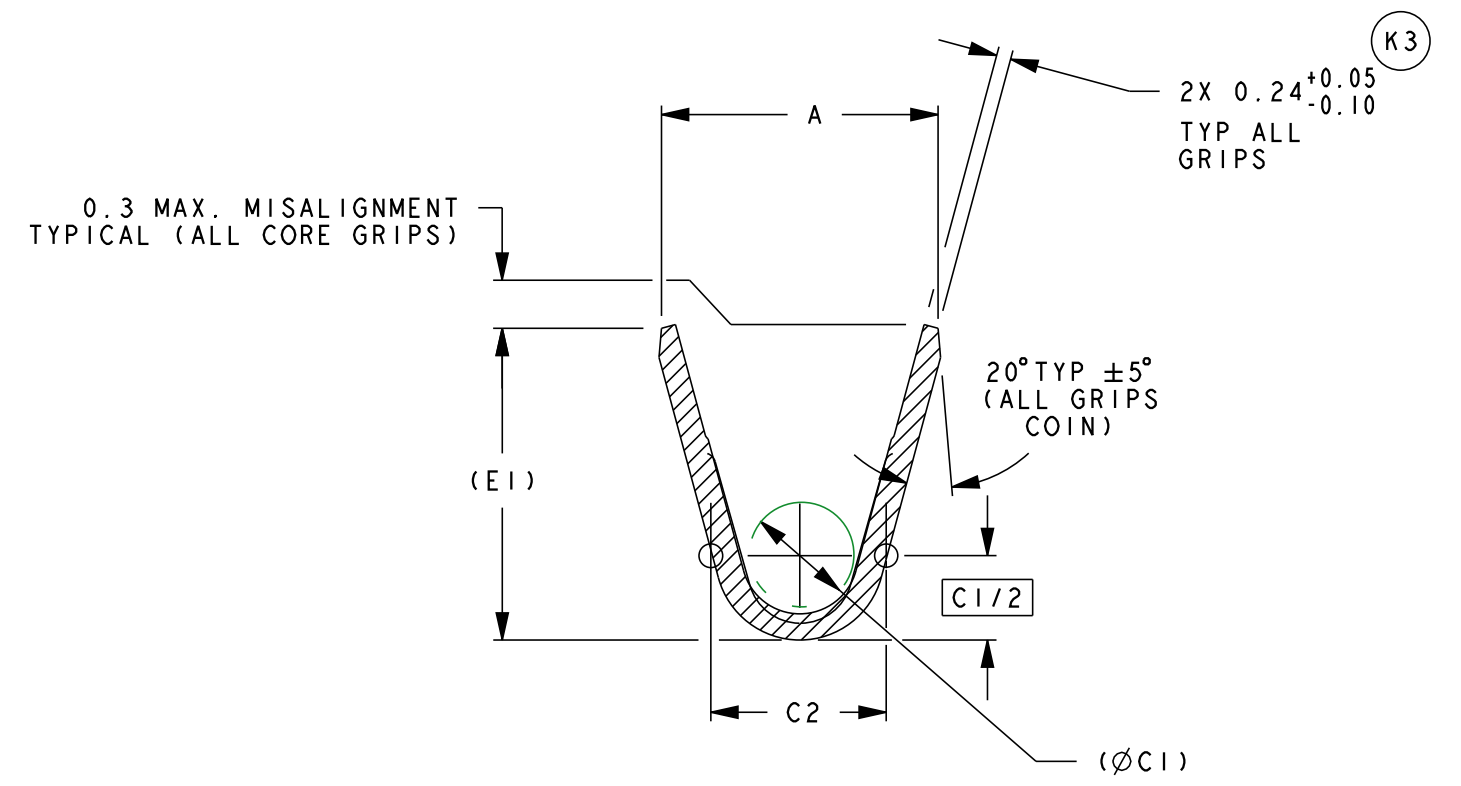
0.3 MAX. MISALIGNMENT TYPICAL (ALL CORE GRIPS)
A
2X 0.24 +0.05 -0.10 TYP ALL GRIPS
K3
20° TYP ±5° (ALL GRIPS COIN)
(E1)
C1/2
C2
(∅C1)

SECTION B-B

FOR SEALED AND UNSEALED
CONSTRUCTION CORE GRIP

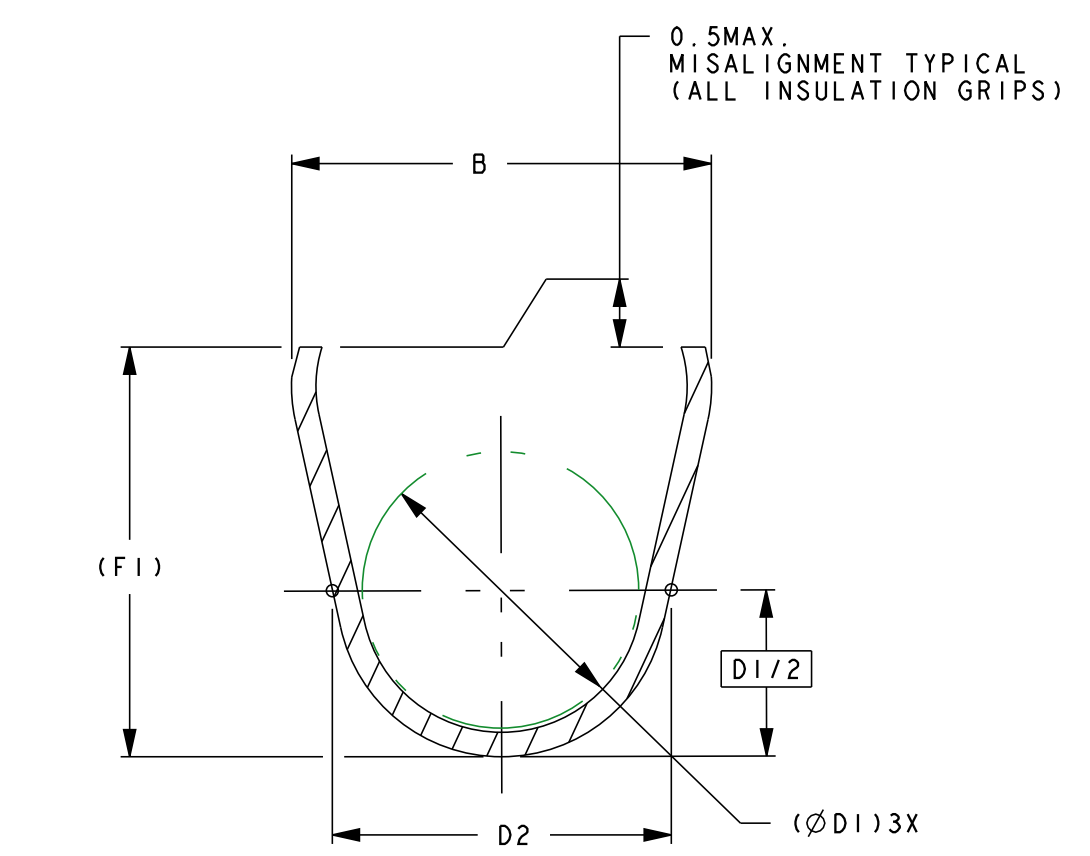
0.5MAX. MISALIGNMENT TYPICAL (ALL INSULATION GRIPS)
B
(F1)
D1/2
D2
(∅D1)3X

SEALED CONSTRUCTION

SECTION C-C

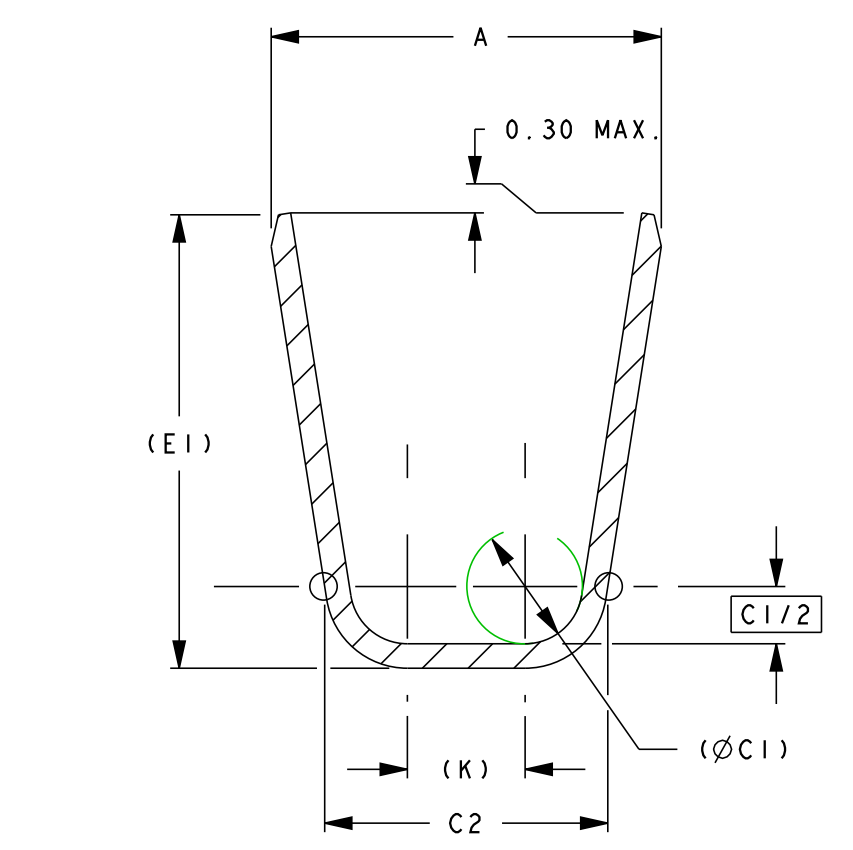
A
0.30 MAX.
(E1)
C1/2
(∅C1)
(K)
C2

SECTION B-B

CORE GRIP
DOUBLE WIRE

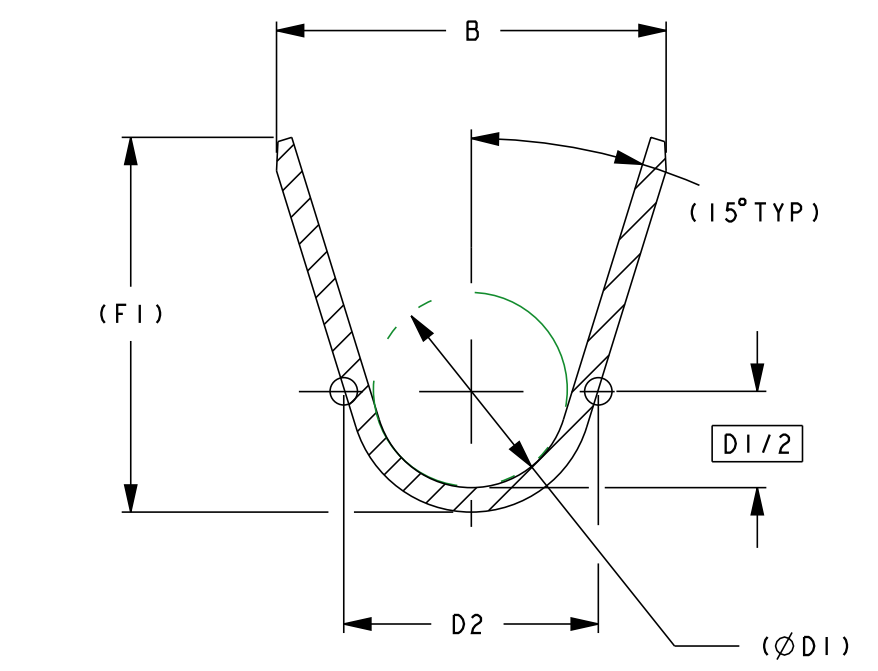
B
(15° TYP)
(F1)
D1/2
D2
(∅D1)

SECTION C-C

UNSEALED CONSTRUCTION

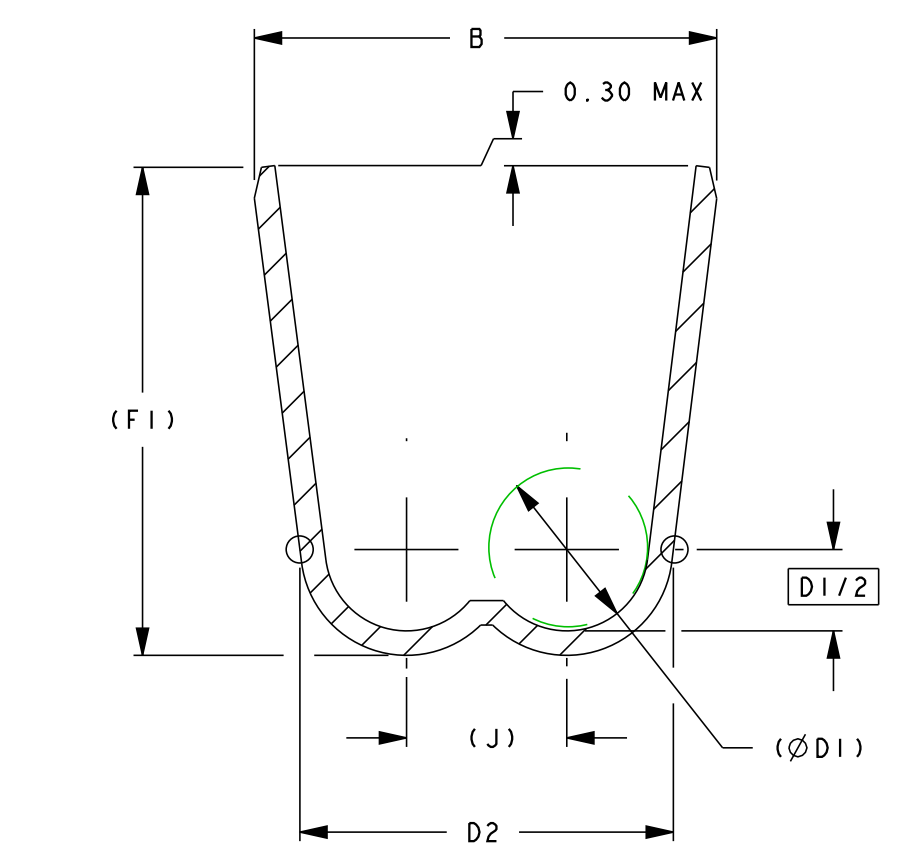
B
0.30 MAX
(F1)
D1/2
(J)
(∅D1)
D2

SECTION C-C

UNSEALED CONSTRUCTION
DOUBLE WIRE

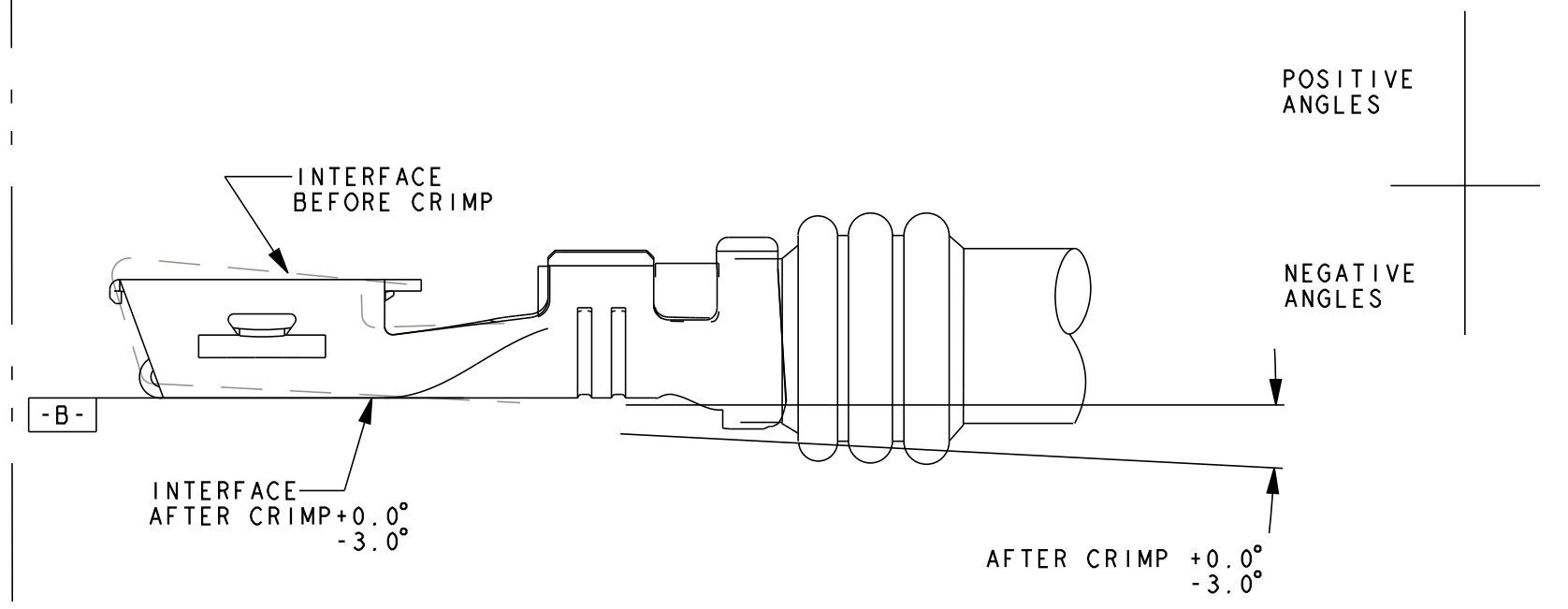
INTERFACE BEFORE CRIMP
POSITIVE ANGLES
NEGATIVE ANGLES
-B-
INTERFACE AFTER CRIMP +0.0° -3.0°
AFTER CRIMP +0.0° -3.0°

| | | | | | | | | |
|---|---|---|---|---|---|---|---|---|
| 16 | 18 | 2.80 | 1.50 | B | 4.45 | 3.90 | O | Y |
| | 16 | 2.80 | 1.60 | B | 4.45 | 4.00 | O | |
| 12 | 14 | 3.10 | 1.95 | B | 5.10 | 4.60 | O | Y |
| | 12 | 3.10 | 2.05 | B | 5.10 | 4.80 | O | |
| 10 | 10 | 3.85 | 2.45 | B | 6.10 | 5.70 | O | Y |
| 17 | | | | | | | | |
| | 22+22 | 2.65 | 1.60 | B | 3.60 | 2.40 | B | N |
| | 22+20 | 2.65 | 1.70 | B | 3.60 | 2.50 | B | N |
| | 20+20 | 2.65 | 1.80 | B | 4.05 | 2.45 | B | N |
| | 18+20 | 2.65 | 1.85 | B | 4.05 | 2.60 | B | N |
| | 18+18 | 2.65 | 1.90 | B | 4.05 | 2.80 | B | N |
| 16 | 18 | 2.80 | 1.50 | B | 3.20 | 2.40 | D | N |
| | 16 | 2.80 | 1.60 | B | 3.20 | 2.80 | D | |
| 13 | | | | | | | | |
| | 16+16 | 3.65 | 2.10 | B | 4.60 | 2.60 | B | N |
| | 14+16 | 3.65 | 2.30 | B | 4.60 | 3.40 | B | N |
| | 14+14 | 3.65 | 2.40 | B | 4.60 | 3.50 | B | N |
| 12 | 14 | 3.10 | 1.95 | B | 3.80 | 3.10 | D | N |
| | 12 | 3.10 | 2.05 | B | 3.80 | 3.30 | D | |
| 11 | | | | | | | | |
| | | | | | | | | |
| 10 | 10 | 3.85 | 2.45 | B | 4.60 | 3.70 | D | N |
| GRIP CODE | * WIRE SIZE | CW | CH | CRIMP STYLE | CW | CH | CRIMP STYLE | CABLE SEAL |
| | | CONDUCTOR | | | INSULATION | | | |
| CRIMP SPECIFICATIONS (MM) (REFERENCE ONLY) | | | | | | | | |

* SEE CHARTED P/N'S FOR APPROPRIATE WIRE SPECIFICATION

SEE F.C INTERLOCK PRODUCT EVALUATION LAB *APEX TERMINAL CRIMP GUIDELINES* FOR CRIMP INFORMATION. THESE GUIDELINES MUST BE FOLLOWED. NOT CRIMPING TO THESE GUIDELINES MAY RESULT IN ELECTRICAL OR MECHANICAL FAILURES.

CRIMP TOLERANCES FOR BOTH CONDUCTOR AND INSULATION CRIMPS TO BE AS FOLLOWS:

CW CRIMP WIDTH ±0.08
CH CRIMP HEIGHT ± 0.05

## CRIMP SPECIFICATIONS

## INSERTION AND REMOVAL FORCES

| | INSERTION | 1ST REMOVAL | 10TH REMOVAL |
|---|---|---|---|
| TERMINAL WITHOUT GREASE | (6.0-9.0 N) | (2.0 N MIN) | (2.0 N MIN) |
| TERMINAL WITH GREASE | (4-7.5 N) | (2.0 N MIN) | (2.0 N MIN) |

INSERTION AND REMOVAL FORCES PER ABOVE CHART ARE TO BE CHECKED USING A CARBIDE GAGE PER F.C.INTERLOCK DWG. (DWG. NO TO BE SPECIFIED). FORCE MEASUREMENTS TO BE TAKEN AUTOMATICALLY AT A RATE OF 10in/min USING MECHANICAL FIXTURING WHICH IS DESIGNED TO HOLD THE GAGE BLADE RIGID, AND ALLOWS THE RECEPTACLE TERMINAL TO FLOAT SLIGHTLY PER F.C.INTERLOCK DWG. (TBD). GAGE BLADE MUST ENTER THE RECEPTACLE TERMINAL AT A MINIMUM 9.5mm

QUALITY ASSURANCE REQUIREMENTS PER

CHRYSLER PS 7300: 2 ◇

Ⓚ INDICATES IN-PROCESS INSPECTION FOR MANUFACTURING DIMENSION(S) OR SPECIFICATIONS: 3

WIRING FABRICATORS MUST PURCHASE FROM SOURCES SHOWN

CABLE SEALS SHOWN ON CHART DWG 04801100

CABLE SEALS TO BE PURCHASED FROM APPROVED SOURCES SHOWN:
LEXINGTON CONNECTOR SEALS

ITEM ③ MATERIAL:0.398±0.013 C194 COPPER ALLOY
100% HALT TIN PLATED 0.0013/0.0038 THICK
TENSILE STRENGTH:413-483: Mpa
ELONGATION IN 51 mm: 2% MIN.

ITEM ④ MATERIAL:0.254±0.010 C70260 TM04
100% HALT TIN PLATED 0.0013/0.0038 THICK
TENSILE STRENGTH:689-862 Mpa
ELONGATION IN 51 mm: 1% MIN.

THIS DRAWING REPLACES DAIMLER CHRYSLER DRAWING 04801083.

| 54001226 | JMS-1225-70G | 04868428AA | ----- | 12(3.530), 14(2.769) | CRIMP | 12 | 4.6 | 6.9 | 2.0 | 2.9 | 4.6 | 5.6 | 4.8 | 10.70 | 5.7 | 14.70 | - | - | 0.6 | 2.1 |
|---|---|---|---|---|---|---|---|---|---|---|---|---|---|---|---|---|---|---|---|---|
| F.C.I. P/N | INTERLOCK P/N | DAIMLERCHRYSLER | MS3450 AWG(MAX O.D) | MS7889, 8288 AWG(MAX O.D.) | WIRE ATTACH | GRIP CODE | A±0.4 | B±0.4 | (∅C1) | C2 | (∅D1) | D2 | (E1) | (F) | (F1) | (G) | (J) | (K) | L | M1 |
| TIN-PLATED W/NYE UNIFLOR 8917 GREASE (ELECTRO-MATTE/HALT) CABLE SEAL | | | SINGLE WIRE | | | | | | | | | | | | | | | | | |

| 54001623 | JMS-1625-70 | 04801089 | ----- | 16(2.413), 18(2.20) | CRIMP | 16 | 3.5 | 5.9 | 1.2 | 1.9 | 3.6 | 4.4 | 4.2 | 8.80 | 4.9 | 11.60 | - | - | 0.1 | 1.8 |
|---|---|---|---|---|---|---|---|---|---|---|---|---|---|---|---|---|---|---|---|---|
| 54001224 | JMS-1225-70 | 04801089 | ----- | 12(3.530), 14(2.769) | CRIMP | 12 | 4.6 | 6.9 | 2.0 | 2.9 | 4.6 | 5.6 | 4.8 | 10.70 | 5.7 | 14.70 | - | - | 0.6 | 2.1 |
| 54001023 | JMS-1025-70 | 04801089 | ----- | 10(4.089) | CRIMP | 10 | 5.6 | 8.8 | 2.4 | 3.4 | 5.4 | 6.5 | 6.1 | 13.50 | 7.3 | 17.00 | - | - | 1.1 | 3.0 |
| F.C.I. P/N | INTERLOCK P/N | DAIMLERCHRYSLER | MS3450 | MS7889, 8288 AWG(MAX O.D.) | WIRE ATTACH | GRIP CODE | A±0.4 | B±0.4 | (∅C1) | C2 | (∅D1) | D2 | (E1) | (F) | (F1) | (G) | (J) | (K) | L | M1 |
| TIN-PLATED W/O GREASE (ELECTRO-MATTE/HALT) (MATERIALS 3 & 4) CABLE SEAL | | | SINGLE WIRE | | | | | | | | | | | | | | | | | |
| 54001871 | JMU-1825-70G | 04868358AA | ----- | 18(2.20) | CRIMP | 18 | 3.8 | 4.2 | 1.5 | 2.3 | 2.0 | 2.9 | - | - | 4.0 | 8.90 | - | - | 0.40 | 1.8 |
| 54001622 | JMU-1625-70G | 04868358AA | ----- | 16(2.413), 18(2.20) | CRIMP | 16 | 3.5 | 4.2 | 1.2 | 1.9 | 2.0 | 2.9 | 4.2 | 8.80 | 4.0 | 8.90 | - | - | 0.40 | 1.8 |
| 54001223 | JMU-1225-70G | 04868358AA | ----- | 12(3.530), 14(2.769) | CRIMP | 12 | 4.6 | 4.9 | 2.0 | 2.9 | 2.8 | 3.8 | 4.8 | 10.70 | 4.4 | 10.20 | - | - | 0.40 | 2.1 |
| 54001026 | JMU-1025-70G | 04868358AA | ----- | 10(4.089) | CRIMP | 10 | 5.6 | 6.8 | 2.4 | 3.4 | 3.2 | 4.2 | 6.1 | 13.50 | 6.2 | 14.45 | - | - | 0.40 | 3.0 |
| F.C.I. P/N | INTERLOCK P/N | DAIMLERCHRYSLER | SINGLE WIRE | | WIRE ATTACH | GRIP CODE | A±0.4 | B±0.4 | (∅C1) | C2 | (∅D1) | D2 | (E1) | (F) | (F1) | (G) | (J) | (K) | L | M1 |
| TIN-PLATED WITH NYE UNIFLOR 8917 GREASE (ELECTRO-MATTE/HALT) UNSEALED | | | | | | | | | | | | | | | | | | | | |
| 54001870 | JMU-1825-70 | 04801136AA | ----- | 18(2.20) | CRIMP | 18 | 3.8 | 4.2 | 1.5 | 2.3 | 2.0 | 2.9 | 4.2 | 8.80 | 4.0 | 8.90 | - | - | 0.40 | 1.8 |
| 54001703 | JMU-1725-70 | 04801136AA | ----- | ----- | CRIMP | 17 | 4.5 | 5.4 | 1.0 | 2.9 | 1.5 | 3.8 | 3.8 | 8.95 | 4.4 | 10.85 | 1.50 | 1.00 | 0.40 | TBD |
| 54001621 | JMU-1625-70 | 04801136AA | ----- | 16(2.413), 18(2.20) | CRIMP | 16 | 3.5 | 4.2 | 1.2 | 1.9 | 2.0 | 2.9 | 4.2 | 8.80 | 4.0 | 8.90 | - | - | 0.40 | 1.8 |
| 54001312 | JMU-1325-70 | 04801136AA | ----- | ----- | CRIMP | 13 | 5.1 | 6.2 | 1.3 | 3.5 | 1.9 | 4.6 | 5.3 | 12.35 | 5.4 | 13.40 | 1.90 | 1.30 | 0.70 | TBD |
| 54001222 | JMU-1225-70 | 04801136AA | ----- | 12(3.530), 14(2.769) | CRIMP | 12 | 4.6 | 4.9 | 2.0 | 2.9 | 2.8 | 3.8 | 4.8 | 10.70 | 4.4 | 10.20 | - | - | 0.40 | 2.1 |
| 54001103 | JMU-1125-70 | 04801136AA | ----- | ----- | CRIMP | 11 | 6.3 | 7.8 | 1.9 | 4.7 | 2.7 | 6.2 | 7.5 | 17.65 | 7.4 | 18.70 | 2.70 | 1.90 | 0.70 | TBD |
| 54001022 | JMU-1025-70 | 04801136AA | ----- | 10(4.089) | CRIMP | 10 | 5.6 | 6.8 | 2.4 | 3.4 | 3.2 | 4.2 | 6.1 | 13.50 | 6.4 | 14.45 | - | - | 0.40 | 3.0 |
| F.C.I. P/N | INTERLOCK P/N | DAIMLERCHRYSLER | MS3450 AWG(MAX O.D) | MS7889, 8288 AWG(MAX O.D.) | WIRE ATTACH | GRIP CODE | A±0.4 | B±0.4 | (∅C1) | C2 | (∅D1) | D2 | (E1) | (F) | (F1) | (G) | (J) | (K) | L | M1 |
| TIN-PLATED W/O GREASE (ELECTRO-MATTE/HALT) UNSEALED | | | SINGLE WIRE | | | | | | | | | | | | | | | | | |

EXCEPTION TO PF-9600

1. TERMINAL IS RATED AT 50 AMPS @ 55°ROA OPEN BENCH TESTED PER PF-752.
2. TERMINAL IS RATED AT 31 AMPS @ 20°ROA PER PF-9600.

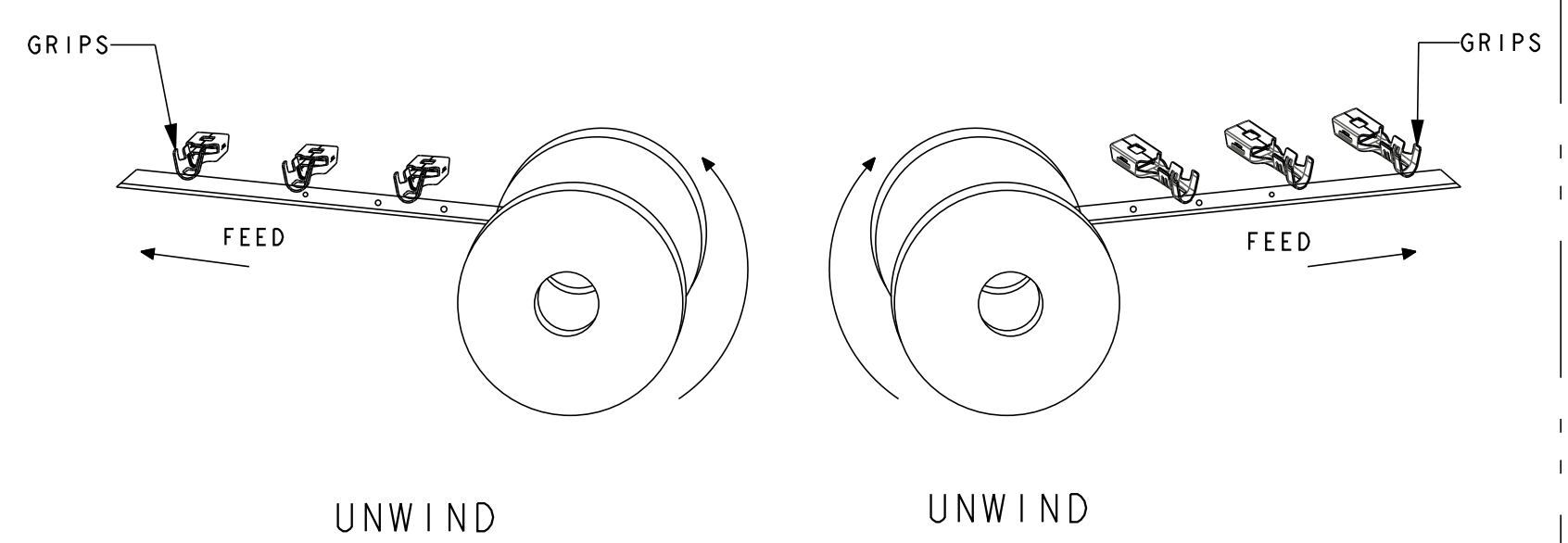
GRIPS
GRIPS
FEED
FEED

UNWIND
STANDARD FEED
DIRECTION "B"
OPTION 1

UNWIND
REWIND FEED
DIRECTION "A"
OPTION 2

VIEW NOT TO SCALE

PACKAGING: PANCAKE REELS WITH PAPER INTERLEAF

NOTE: CUSTOMER REQUEST FOR REWIND PARTS WILL INCLUDE AN "RWC" AT THE END OF BILL OF MATERIAL (B.O.M.) PART NUMBER
I.E. JMS-1025-70-OPTION 1
JMS-1025-70RWC-OPTION 2

THIS PART NUMBERING SYSTEM WILL BE AVAILABLE FOR ALL B.O.M. PART NUMBERS CHARTED TO THE LEFT IN CHART.

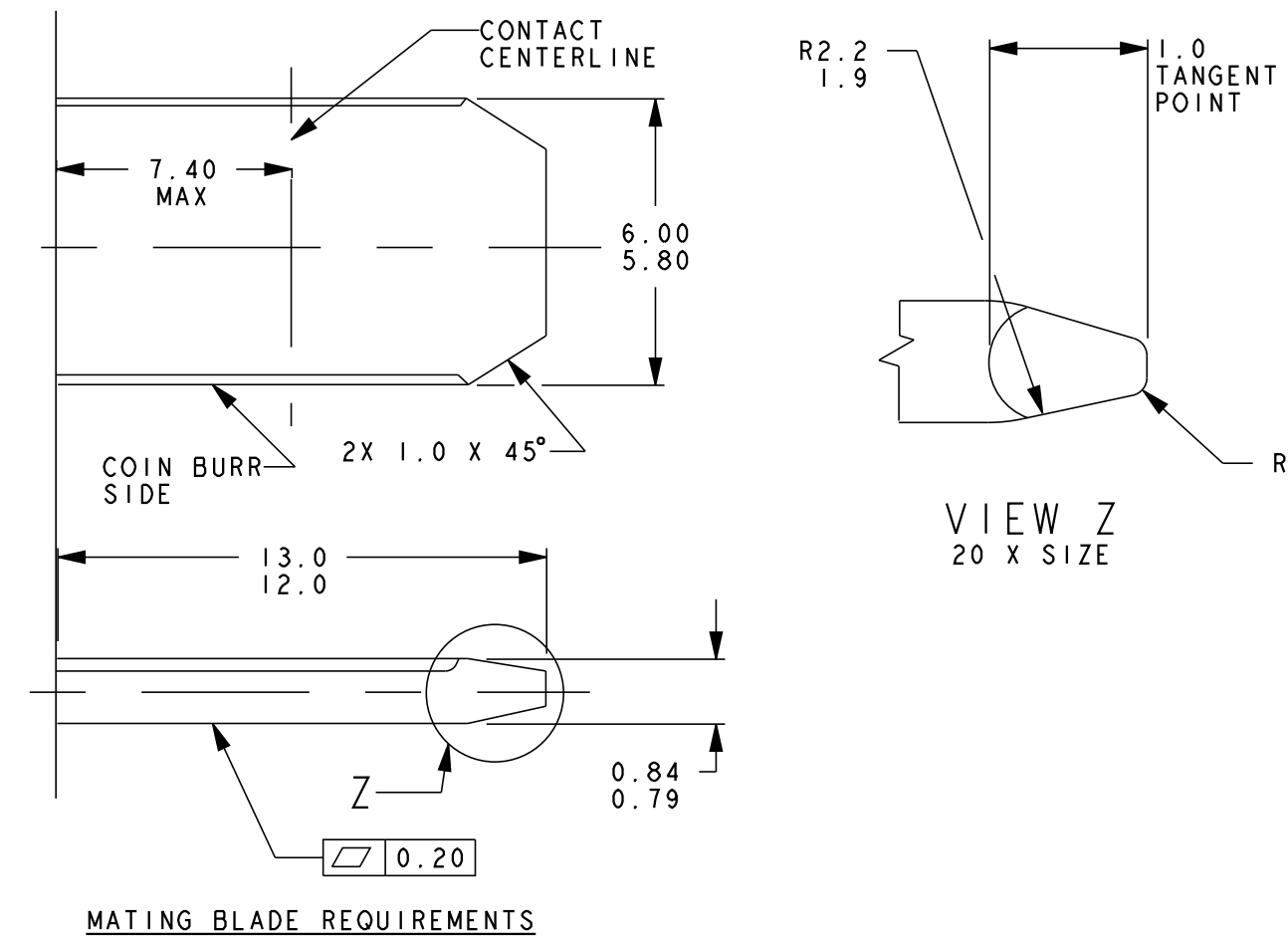
CONTACT CENTERLINE
7.40 MAX
6.00 5.80
COIN BURR SIDE
2X 1.0 X 45°
13.0 12.0
Z
0.84 0.79
0.20
R2.2 1.9
1.0 TANGENT POINT
R
VIEW Z
20 X SIZE

MATING BLADE REQUIREMENTS

COPPER ALLOY, 50% MIN.
I.A.C.S..TIN PLATED.

MATING BLADE VIEW

| CHARTED CABLE SEALS | | | | | |
|---|---|---|---|---|---|
| 18 | E0001906 | X-1053-005 | YELLOW | MIL-123A | MS-8288 |
| 16 | E0001905 | X-1053-004 | ORANGE | MIL-123A | MS-8288 |
| 14 | E0001904 | X-1053-003 | LT. BLUE | MIL-123A | MS-8288 |
| 12 | 7158-3136-60 | X-1067-002 | GREEN | MIL-123A | MS-8288 |
| 10 | E0001902 | X-1053-001 | RYL BLUE | APPROVED WIRE SPEC. | APPROVED WIRE SPEC. |
| WIRE SIZE | YAZAKI PART NO. | L.C.S. PART NO. | COLOR | FORD | DAIMLER CHRYSLER |

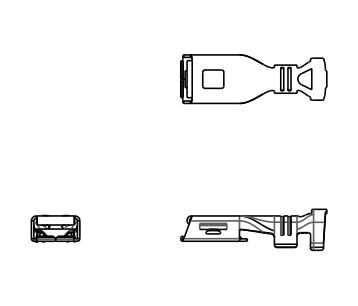

ACTUAL SIZE

| | | | | | | | |
|---|---|---|---|---|---|---|---|
| 11754 | 12/01/10 | Q1 | K36 | REMOVED M2 DIMENSION, ADDED 2.0, 3.75 REFERENCE DIMENSIONS. | R.CUE | RC | RC |
| 9597 | 06/12/07 | Q | -<br>C35 | CORRECTED/UPDATED PER DDD MARK-UP DELETED CHART COULMNS Q THROUGH Z | VB | VB | VB |
| \| | \| | \| | M10 | GENERAL GRIP AND CARRIER BLANK VIEW DELETED | \| | \| | \| |
| 9240 | 1/29/07 | P3 | - | NEW FCI LOGO IMPLEMENTED, CORRECTED/UPDATED PER DDD MARK-UP | VB | SSS | SSS |
| 9161 | 01/10/07 | P2 | K6 | 0.24 +/-0.05 WAS 0.24 | VB | SSS | SSS |
| \| | \| | \| | \| | MISSING DIMENSIONS RESTORED FROM REV. P1 | \| | \| | \| |
| 8832 | 01/08/07 | P1 | - | GOLD PLATING MATERIAL INSERT AND PART NUMBERS REMOVED | VB | SSS | SSS |
| \| | \| | \| | D3 | INSERTION AND REMOVAL FORCES CHART ADDED TO THE DRAWING | \| | \| | \| |
| \| | \| | \| | ALL | DIMENSION 'V' VALUE 4.8 WAS 4.80 | \| | \| | \| |
| \| | \| | \| | \| | DIMENSION'V'VALUE FOR P/Ns 54001224, 54001026 & 54001022 CORRECTED | \| | \| | \| |
| \| | \| | \| | H1,G1 | WINDING DIRECTION NOTE CORRECTED | \| | \| | \| |
| 7913 | 08/16/05 | P | ROW1 | P/N'S 54001026 & JMU-1025-70G ADDED FOR 10 GA UNSEALED W/ GREASE | JAP | SSS | SSS |
| 7806 | 06/14/05 | N | M1 | NYOGEL 8917 GREASE WAS NYE 8511 AND DWG#WAS A25025 | JRH | SSS | SSS |
| 7562 | 03/09/05 | M3 | - | CORRECT/UPDATE DRAWING | SRR | GDL | GDL |
| 7542 | 3/01/05 | M2 | - | CORRECT / UPDATE DRAWING | SRR | GDL | GDL |
| 7504 | 2/22/05 | M | - | CORRECT / UPDATE DRAWING | SRR | GDL | GDL |
| 7399 | 1/19/05 | A+ | - | MARK-UP DDD RESOLUTION | GDL | GDL | GDL |
| 6557 | 4/14/04 | A | - | NEW RELEASE REPLACES CHRY DWG 04801083 | DET | TWT | JVF |
| ECN-NUMBER | DATE M-D-YY | REVISION | ZONE | CHANGE DESCRIPTION | DRAWN BY | CHK. BY | APPR. BY |

PRODUCT SPEC. -
PACKAGING SPEC. -
APPLICATION SPEC. -

THIS DRAWING AND ALL OTHER INFORMATION CONTAINED THEREIN} IS PROPRIETARY AND THE PROPERTY OF FCI.This drawing may not be copied, reproduced or disclosed to any third party without the expressed written permission of FCI.
© FCI April 1999

TOLERANCES 1 PLACE DIM ±0.30
2 PLACE DIM ±0.13
ANGULAR DIM ±2°
COUNTERPART NO. -
MATERIAL : SEE NOTES
COLOR : -
SURFACE FINISH -
3RD ANGLE
CAD SYSTEM pro / eng.
DIMENSION IN MILLIMETERS
DWG SIZE R96
DO NOT SCALE DRAWING
TOOL NO. D518-CUST
ECO Loc. Code NA

| | DATE | NAME |
|---|---|---|
| DRAWN BY | 01/19/05 | S.RANGARAJAN |
| CHECKED BY | 01/19/05 | GREEG LEECE |
| APPROVED BY | 01/19/05 | GREEG LEECE |

TITLE
CHART - TERMINAL
BLADE TYPE - FEMALE
[6.35 APEX SYSTEM]

DRAWING NUMBER A25025_CUST
SHEET 1 of 1
ESR NO. -
CAT. NO. -
FILE NAME A25025_CUST
SCALE 10:1

# Mouser Electronics

Authorized Distributor

Click to View Pricing, Inventory, Delivery & Lifecycle Information:

[Aptiv](#):

[54001623](#) [54001623-L](#)