DWG STATUS					ZONE	REVISION HISTORY	AUTH	DR	APVD 1	APVD 2
DATE	STG	REV	N/P	CHG						
30N018	R	01				FILE TRANSLATED FROM MVL SYSTEM REDRAWN IN NX		VSR	TRN	TRN
21MY19	R	02				UPDATED TO APTIV STANDARD APTIV P/N ADDED SLIDER MATERIAL UPDATED MVL REVISION LEVEL PASSED TO C (CR-18/20573)		K.ANJ	J.LAL	L.LEC

VERSION AVEC SHUNT
FEMALE CONNECTOR WITH SHUNT
MVL P/N :211 PC 29 9S 0 043
APTIV P/N : 33500316

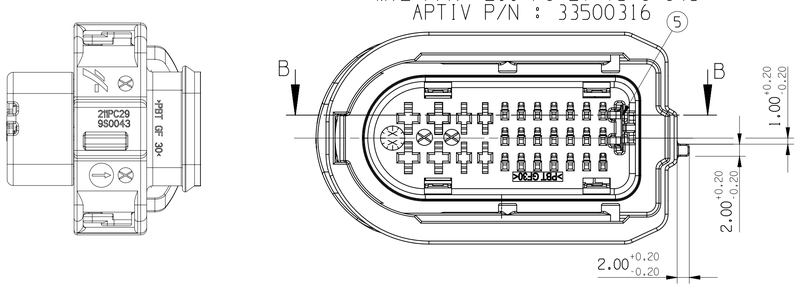

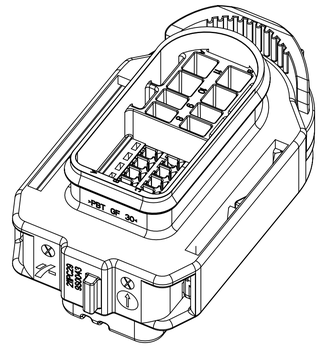

IMPLANTATION DES ALVEOLES
CAVITIES LAY OUT

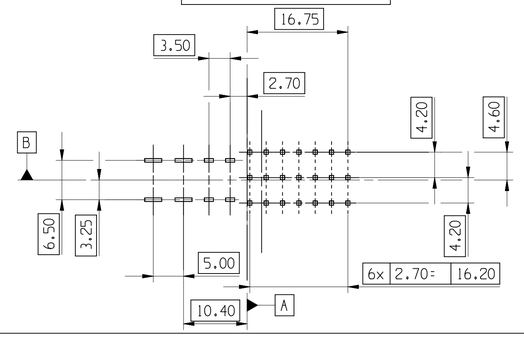

DETAIL SHUNT
SHUNT DETAIL

SECTION B-B
SCALE 6:1

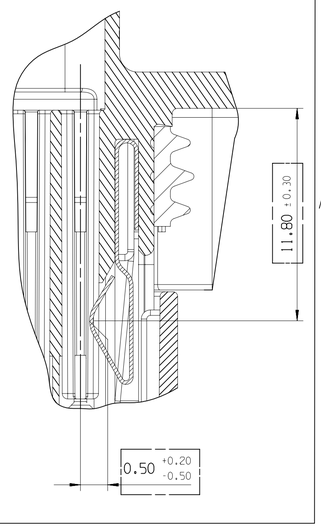

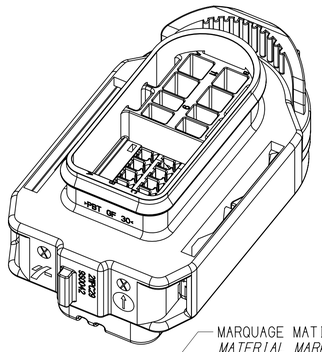

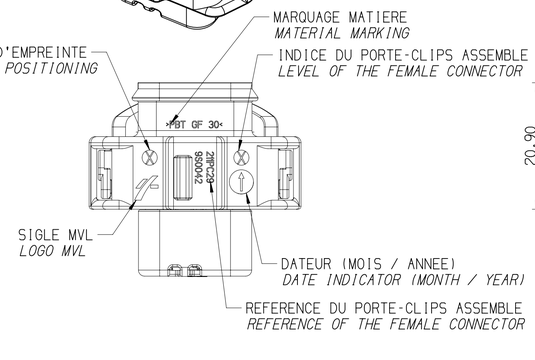

SECTION A-A

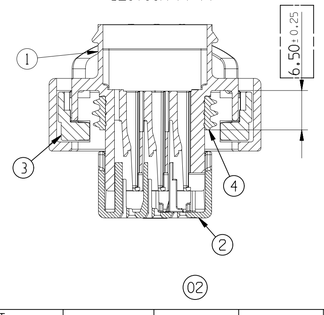

(02)

VERSION SANS SHUNT
FEMALE CONNECTOR WITHOUT SHUNT
MVL P/N : 211 PC 29 9S 0 042
APTIV P/N : 10819390

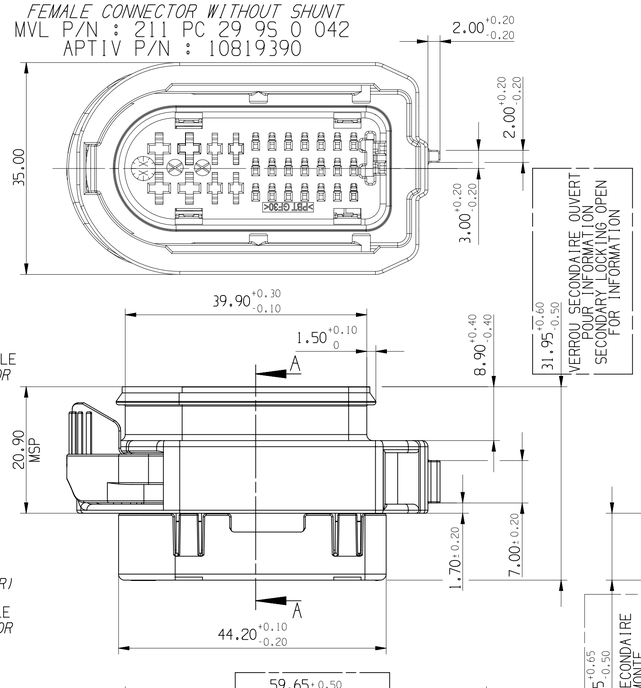

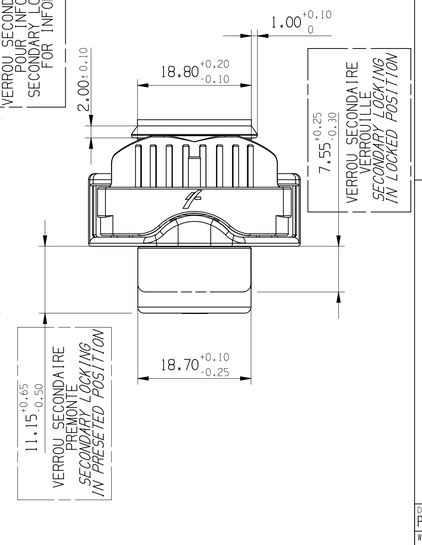

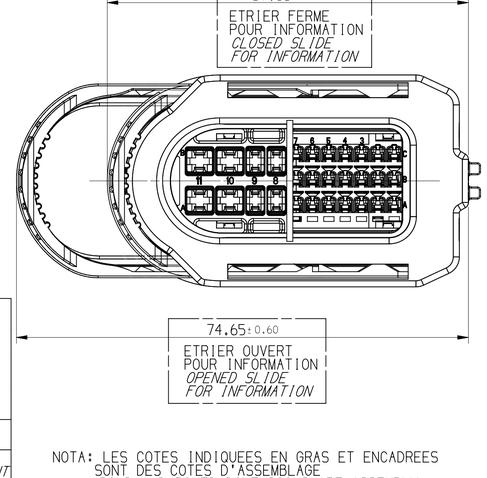

NOTA: LES COTES INDIQUEES EN GRAS ET ENCADREES SONT DES COTES D'ASSEMBLAGE
BOLD AND BOXED DIMENSIONS ARE ASSEMBLY DIMENSIONS

LE PC EST LIVRE AVEC L'ETRIER EN POSITION FERME
THE FEMALE CONNECTOR IS DELIVERED WITH LOCKING CAM IN CLOSED POSITION

Rep *Item*	DESIGNATION *DESCRIPTION*	REF. MVL	REF. APTIV	MATIERE *MATERIAL*	COULEUR *COLOR*	INDICE PIECE *P/N REVISION*
5	SHUNT *SHUNT*	211 C 124	33513987	Cu Mg 1		(02)
4	JOINT INTERFACIAL *INTERFACIAL SEAL*	211 M 8106	33508068	SILICONE *SILICON*	GRIS *GREY*	
3	ETRIER *SLIDER*	211 M 0102	33508032	PBT GF 15	NOIR *BLACK*	
2	VERROU SECONDAIRE *SECONDARY LOCKING*	211 M 4103	33508054	PBT GF 30	JAUNE *YELLOW*	
1	PORTE-CLIPS *FEMALE CONNECTOR*	211 I 0 069	33505856	PBT GF 30	NOIR *BLACK*	AVEC SHUNT *WITH SHUNT*
		211 I 0 059	33505854	PBT GF 30	NOIR *BLACK*	SANS SHUNT *WITHOUT SHUNT*

REFERENCE WITH SHUNT	MVL	211 PC 29 9 S 0 043	C (02)
	CUSTOMER	8200 093 849	
	APTIV	33500316	02
REFERENCE WITHOUT SHUNT	MVL	211 PC 29 9 S 0 042	C (02)
	CUSTOMER	8200 093 848	
	APTIV	10819390	02

2.8 x 0.8 SICMA 3	1 à 2	211 CC 3 S XXX0
2.8 x 0.8 SICMA 2	1 à 3	211 CC 3 S XX2X
1.5 x 0.8 SICMA 3	1 à 2	211 CC 2 S XXX0
1.5 x 0.8 SICMA 2	1 à 2	211 CC 2 S XX2X
MICRO-SICMA 1 x 0.635	0 à 1	211 CC 1 S XX23
TYPE CLIP *FEMALE TERMINAL TYPE*	GAMME *RANGE*	REFERENCE *REFERENCE*
CLIPS UTILISABLES *AVAILABLE FEMALE TERMINALS*		

LINE DRAWN THROUGH A PART NUMBER INDICATES THAT PHYSICAL PARTS ARE NOT AVAILABLE FOR ORDERING.

PART NUMBERS THAT DO NOT HAVE A LINE PRESENT INDICATE THAT PHYSICAL PARTS ARE AVAILABLE FOR ORDERING.

CONTACT APTIV SALES TO ASSURE AVAILABILITY OF PARTS.

LA LIGNE TRACÉE SUR LA RÉFÉRENCE PIÈCE INDIQUE QUE LA PIÈCE N'EST PAS DISPONIBLE À LA COMMANDE

LES RÉFÉRENCES PIÈCES QUI NE SONT PAS BARRÉES INDIQUENT QUE CELLES-CI SONT DISPONIBLES PHYSIQUEMENT POUR ÊTRE COMMANDÉES

CONTACTER LE SERVICE COMMERCIAL DE APTIV POUR S'ASSURER DE LA DISPONIBILITÉ DES PIÈCES

R 0.1 MAX
R 0.2 MAX
SHARP CORNER TOLERANCE

DIM TO CHECK PRUEFMASSE
DIM FOR HELP HILFSMASSE
THEORETIC DIM THEORE. MASSE

DWG TYP: PART DRAWING
WEIGHT (GR)
VOLUME (CM³)
ROUTING
DISTR CODE: D
UNLESS OTHERWISE SPECIFIED

GENERAL TOLERANCES ACCORDING TO: ±0.3 ±3°

GD&T ACCORDING TO:

REFERENCE 211FT0383

FIRST ANGLE PROJECTION

DO NOT SCALE
USE MATH DATA
CAD NX

•APTIV•

CONNECTION SYSTEMS
Chennai, India

COPYRIGHT 2013 APTIV. ALL RIGHTS RESERVED.

THIS DRAWING IS THE PROPERTY OF APTIV AND CONTAINS APTIV CONFIDENTIAL INFORMATION. THE REPRODUCTION, DISTRIBUTION AND UTILIZATION OF THIS DOCUMENT OR ITS RELATED CAD MATH DATA, AS WELL AS COMMUNICATION OF ANY CONTENT TO OTHERS, WITHOUT EXPRESS AUTHORIZATION, IS PROHIBITED.

CE PLAN EST LE PROPRIETE DE APTIV ET CONTIENT DES INFORMATIONS APTIV CONFIDENTIELLES. LA REPRODUCTION, LA DISTRIBUTION ET L'UTILISATION DE CE DOCUMENT OU DE SES DONNÉES MATHÉMATIQUES CAO, AINSI QUE LA COMMUNICATION DE TOUT CONTENU À AUTRUI, SANS AUTORISATION EXPRESSE EST INTERDITE.

		DATE
DR	S.LOAS	28AU00
APVD1	F FAURIE	14MY13
APVD2	S LACOTE	14MY13
APVD3	Pascal MENARD	14MY13
APVD4		
APVD5		

SUBSTANCES OF CONCERN AND RECYCLED CONTENT PER APTIV 10949001
MATIERES PROSCRITES ET CONTENU RECYCLABLE SELON APTIV 10949001

MATERIAL: SEE TABLE

DRAWING NAME: 29 WAY DOOR FEMALE CONNECTOR

DRAWING NUMBER: 33526183

SIZE	SCALE	FRAME NO	SHEET NO	STG	REV	N/P
A1	2:1	1 OF 1	1 OF 1	R	02	

Dec: KZ591M
Part: 33526183-CUS01-S01/02 Date: 10-Sep-19 Time: 18:14:50
KZ591M,09100201 9,14144,Poli.cus

Mouser Electronics

Authorized Distributor

Click to View Pricing, Inventory, Delivery & Lifecycle Information:

Aptiv:
211PC299S0042