RECEPTACLE HOUSING 3 WAY	
APTIV P/N	CODING
13543910	CODING - A

SCALE 2:1

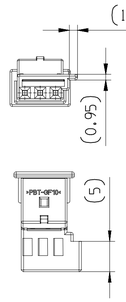

13543911	CODING - B

SCALE 2:1

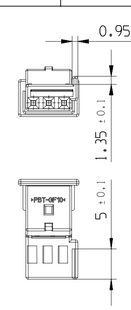

13543912	CODING - D

SCALE 2:1

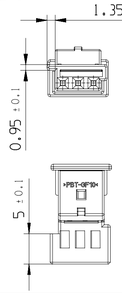

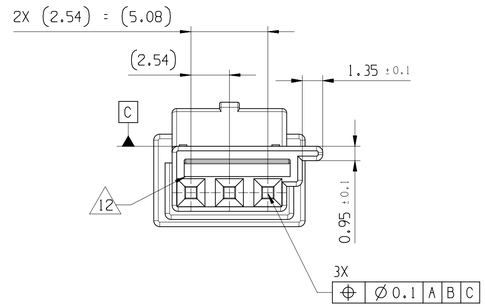

SECTION A-A

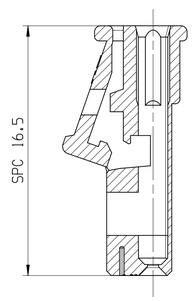

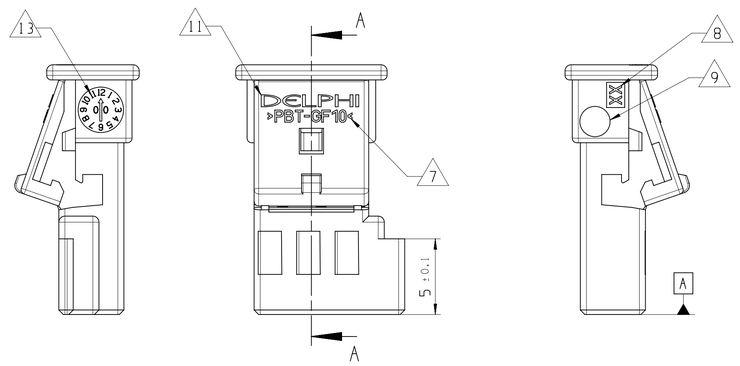

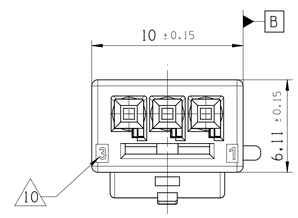

DWG STATUS					ZONE	REVISION HISTORY	AUTH	DR	APVD 1	APVD 2
DATE	STG	REV	N/P	CHG						
17DE21	R	01				INITIAL RELEASE		P.BAL	M.LAG	M.LAG

3D VIEW

SCALE 1:1

NOTE	SPECIFICATIONS
1	FEMALE CONNECTOR ACCORDING TO APTIV SPECIFICATION: CAQE TBD
2	FEMALE CONNECTOR ACCORDING TO: -TEMPERATURE CLASS TX -ENGINE VIBRATOR CLASS VX -SEALING CLASS EX
3	USER'S MANUAL: 13543918-CUS76-S01
4	DELIVERY CONNECTOR WEIGHT : SEE TABLE
5	NO WAFER HINGE OR WAFER HINGE BROKEN ALLOWED
6	VISUAL DEFECTS ON NO FUNCTIONNAL AREAS ALLOWED
7	MATERIAL NAME
8	TOOL CAVITY NUMBER
9	INDEX REPLCEMENT INSERT
10	PART CAVITY NUMBER
11	SUPPLIER LOGO
12	REPLACEMENT INSERT BLANK
13	DATE INSERT

OVERALL DIMENSION FOR MOUNTABILITY

SECONDARY LOCKING IN END LOCKED POSITION

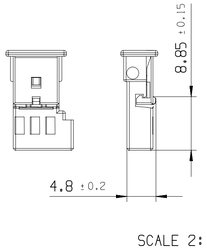

SCALE 2:1

WITH MATING PART

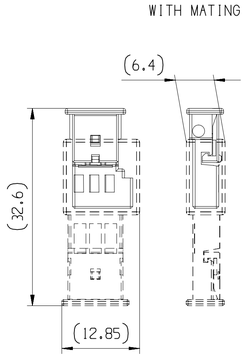

MOUNTING OPENING

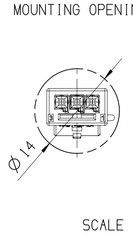

SCALE 2:1

ASSOCIATED PARTS (FOR INFORMATION)

DESCRIPTION	APTIV P/N	WIRE SECTION	DIAMETER OF WIRE SIZE
MATING PART	-	-	-
FEMALE TERMINAL MTS 0.63	13580658	0.75mm²	1.9

DESCRIPTION	CODE	APTIV PART NUMBER	WEIGHT (kg)	MATERIAL	COLOR
RECEPTACLE HOUSING 3 WAY	D	13543917	0.00048	PBT GF10	VIOLET
	B	13543915	0.00048	PBT GF10	NATURE
	A	13543914	0.00048	PBT GF10	BLACK

A LINE DRAWN THROUGH A PART NUMBER INDICATES THAT PHYSICAL PARTS ARE NOT AVAILABLE FOR ORDERING.

PART NUMBERS THAT DO NOT HAVE A LINE PRESENT INDICATE THAT PHYSICAL PARTS ARE AVAILABLE FOR ORDERING.

CONTACT APTIV SALES TO ASSURE AVAILABILITY OF PARTS.

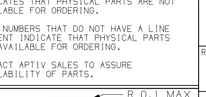

SHARP CORNER TOLERANCE

DIM TO CHECK / ( ) DIM FOR HELP / THEORETIC DIM	DIMENSIONAL RANGE (MM) FROM TO	> 0 20	> 20 30	> 30 70	> 70 100	>100 150	>150 200	>200 250	>250 300	>300 400	CHART E1
	TOLERANCE UNLESS OTHERWISE SPECIFIED	±0.15	±0.2	±0.3	±0.4	±0.5	±0.6	±0.8	±1	±1.2	
	ANGULAR TOLERANCE ±2°										

DWG TYP: CUSTOMER PART DRAWING

WEIGHT (GR): SEE TABLE

VOLUME (CM³): ---

ROUTING

DISTR CODE: D

UNLESS OTHERWISE SPECIFIED

GENERAL TOLERANCES ACCORDING TO:

SEE CHART

GD&T ACCORDING TO:

ISO1101

REFERENCE

FIRST ANGLE PROJECTION

DO NOT SCALE

USE MATH DATA

CAD NX

APTIV

CONNECTION SYSTEMS

Chennai, India

COPYRIGHT 2021 APTIV. ALL RIGHTS RESERVED.

THIS DRAWING IS THE PROPERTY OF APTIV AND CONTAINS APTIV CONFIDENTIAL INFORMATION. THE REPRODUCTION, DISTRIBUTION AND UTILIZATION OF THIS DOCUMENT OR ITS RELATED CAD MATH DATA, AS WELL AS COMMUNICATION OF ANY CONTENT TO OTHERS, WITHOUT EXPRESS AUTHORIZATION, IS PROHIBITED.

		DATE
DR	P.BALAJI	17DE21
APVD1	LAGUETTE MAURICE	17DE21
APVD2	LAGUETTE MAURICE	17DE21
APVD3		
APVD4		
APVD5		

SUBSTANCES OF CONCERN AND RECYCLED CONTENT PER APTIV 1094900I

MATERIAL: SEE TABLE

DRAWING NAME: RECEPTACLE HOUSING 3 WAY FOR MTS/MQS 0.63

DRAWING NUMBER: 13543918

SIZE	SCALE	FRAME NO	SHEET NO	STG	REV	N/P
A1	5:1	1 OF 1	1 OF 1	R	01	

User: KZ5GTM
Model: KZ5GTM_B-CUS04-S01/01 Date: 25-Feb-22 Time: 11:48:06
KZ5GTM_02252022_07:17_954pose.cus

Mouser Electronics

Authorized Distributor

Click to View Pricing, Inventory, Delivery & Lifecycle Information:

Aptiv:
13543915