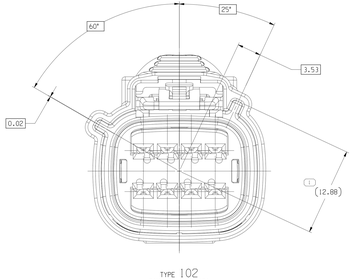

TYPE 102
SAME AS TYPE 101
EXCEPT AS SHOWN

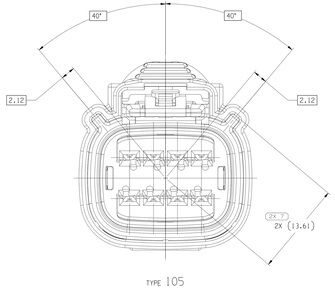

TYPE 105
SAME AS TYPE 101
EXCEPT AS SHOWN

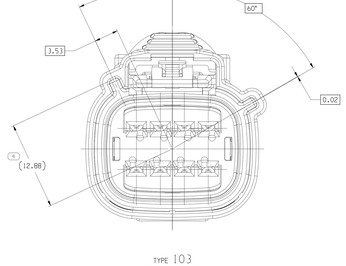

TYPE 103
SAME AS TYPE 101
EXCEPT AS SHOWN

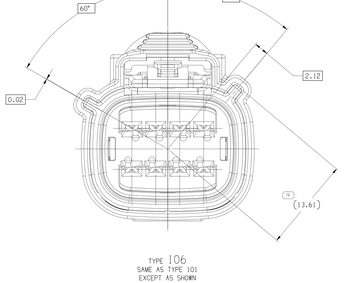

TYPE 106
SAME AS TYPE 101
EXCEPT AS SHOWN

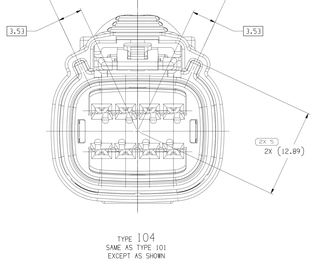

TYPE 104
SAME AS TYPE 101
EXCEPT AS SHOWN

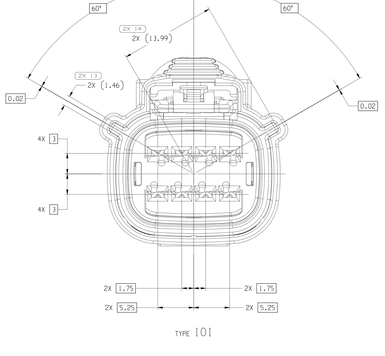

TYPE 101

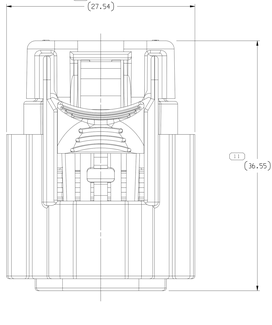

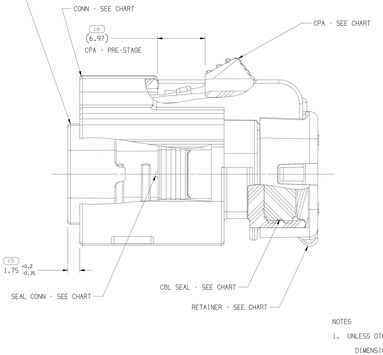

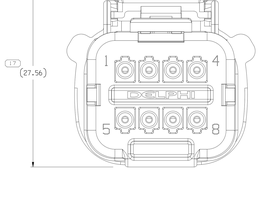

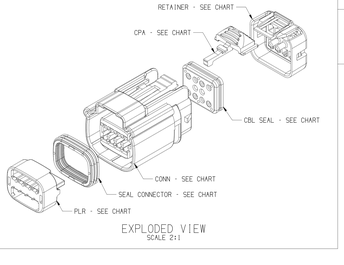

EXPLODED VIEW
SCALE 2:1

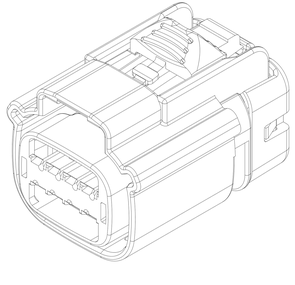

SYMBOL DEFINITION		MISSING SYMBOLS
A DIMENSION WITHOUT AN INSPECTION REPORT SYMBOL DOES NOT REQUIRE INSPECTION. IT MAY BE CONTROLLED ON THE INDIVIDUAL COMPONENT DRAWING.	TOTAL NO OF INSPECTIONS REQUIRED: 16	2 3 6 8 10
	LAST NO. USED: 17	

DWG STATUS					ZONE	REVISION HISTORY	AUTH	DR	APVD	APVD
DATE	ISSUE	REV	N/P	CHG						
10JA13	R	01	-	-	-	15514667 -WAS PE246387, REV'D & RELEASED; 15514668 -WAS PE246388, REV'D & RELEASED; 15514669 -WAS PE246389, REV'D & RELEASED; 15514670 -WAS PE246390, REV'D & RELEASED; 15514671 -WAS PE246391, REV'D & RELEASED; 15514672 -WAS PE246392, REV'D & RELEASED;	421059	HCD	HCD	GGI	
21MF13	R	02	-	-	-	ALL PARTS - UPDATED PDM ATTRIBUTES	421644	AHY	AHY	DAT
21MF13	R	03	-	-	-	ALL PARTS - UPDATED CONN, RETAINER AND PLR	422336	AHY	AHY	DAT
01NO13	R	04	-	-	-	ALL PARTS - UPDATED PLR, SEAL CONN, SEAL CBL AND CPA	424351	DCH	DCH	GGI
05DE13	R	05	-	-	-	ALL PARTS - ADDED "ACCEPTED CABLE O.D." NOTE	424878	CDD	CDD	GGI
13OC14	R	06	-	-	-	ALL PARTS - UPDATED CONN, CPA, RETAINER, PLR AND RELATED DIMS	427903	ADC	JVW	GGI
21SE15	R	07	-	-	-	ALL PARTS - 6.97 +0.15/-0.25 WAS 6.97, 1.75 +1.15/-0.25 WAS 1.75 AND UPDATED PART AVAILABILITY	430845	CDD	CDD	DAT
02OC15	R	08	-	-	-	ALL PARTS - 1.75 +0.15/-0.4 WAS 1.75 +0.15/-0.25	430983	JOM	JOM	FBK
25FE16	R	09	-	-	-	15514668-72 - UPDATED PART AVAILABILITY	432154	ADC	JVW	DGL
06JL17	R	10	-	-	-	ALL PARTS - ADDED "ASSEMBLY" NOTES 13 PLS1, REMOVED "ASSEMBLY ACCEPTS CABLE O.D" NOTE AND UPDATED "APPEARANCE" NOTE	437090	JOM	JOM	DGL
10JA18	R	11	-	-	-	ALL PARTS - ADDED SHT 1 OF 2	438404	ESC	ESC	ACV
19JN18	R	12	-	-	-	15514667 - UPDATED PDM ATTRIBUTES; ALL PARTS - (6.97) WAS 6.97 +0.15/-0.25; 1.75 +0.2/-0.25 WAS 1.75 +0.15/-0.4; PSD WAS DIM #15	440179	ACV	DGL	ACV
18JL18	R	13	-	-	-	15514668 - UPDATED PART AVAILABILITY	440459	ACV	DGL	ACV
19JN19	R	14	-	-	-	ALL PARTS - ADDED "PUNCH PATTERN CONFIGURATIONS" & "ASSEMBLIES WITHOUT CPA" NOTES	443333	JLL	DSP	DSP
07MR22	R	15	-	-	-	15514669 & 15514670 - UPDATED PART AVAILABILITY (P/N WAS NOT AVAILABLE)	556797	GDH	JAA	SV

NOTES

1. UNLESS OTHERWISE SPECIFIED AND/OR INDICATED:

   DIMENSIONS ARE TO FACE OF VIEW SHOWN AND AUTOMATICALLY ROUNDED BY COMPUTER FOR INSPECTION (SEE MATH MODEL FOR PRECISE DIMENSIONS). FOR ALL OTHER DIMENSIONS NOT SHOWN BUT REQUIRED FOR TOOL BUILD, SEE MATH MODEL FOR PRECISE TOOL PATH DATA.

2. PART IS MANUFACTURED TO GEOMETRIC TOLERANCES. CENTERLINE DIMENSIONS ARE FOR REFERENCE ONLY.

3. SEALING CODE 4 - DESIGN WILL MEET REQUIREMENTS OF SAE/USCAR-2 CONNECTOR SYSTEM ENVIRONMENTAL TEST FLOWCHART (PRESSURE/VACUUM AND SUBMERSION).

4. THIS PRODUCT IS NOT CATEGORIZED AS AN APPEARANCE ITEM. MINOR IMPERFECTIONS INCLUDING, BUT NOT LIMITED TO, FLOW MARKS, COLOR BLEMISHES, GATE VESTIGE, AND SOFT FLASH THAT DO NOT AFFECT THE FIT, FORM, OR FUNCTION OF THE PART ARE PERMISSIBLE PER EANP.4-3.CS.01.EN.

5. FOR APPLICATION DATA SEE THE INDIVIDUAL APPLICATION DRAWINGS.

6. ASSEMBLY TO BE USED WITH APPROPRIATE APTIV HOLDER DESIGN.

7. ASSEMBLY TO BE PROCESSED USING APTIV CONNECTION SYSTEMS BEST PRACTICE METHODS AND/OR CONNECTOR ASSEMBLY INSTRUCTIONS AND APPLICABLE REPAIR PROCEDURES.

8. BEFORE TERMINAL ASSEMBLY: VERIFY THAT PLR IS IN THE PRE-STAGE POSITION ON THE CONNECTOR. IF NOT: RETURN PLR TO PRE-STAGE POSITION.

9. FOR DIFFERENT PUNCH PATTERN CONFIGURATIONS (IF AVAILABLE) SEE SHEET 2

10. FOR ASSEMBLIES WITHOUT CPA SEE DRAWING 15532402

15514672	05	AF	106	15514665	15514685	15514684	15514683	15514678	15519096	F
15514671	05	AF	105	15514664	15514685	15514684	15514683	15514678	15519096	E
15514670	05	AG	104	15514663	15514685	15514684	15514683	15514678	15519096	D
15514669	05	AG	103	15514662	15514685	15514684	15514683	15514678	15519096	C
15514668	05	AG	102	15514661	15514685	15514684	15514683	15514678	15519096	B
15514667	06	AA	101	15514659	15514685	15514684	15514683	15514678	15519096	A
PART NO	REV	N/P	TYPE	CONNECTOR	PLR	SEAL CONN	SEAL CBL	RETAINER	CPA	USCAR OPTION

DRAWING NUMBER 15514673
A1x3 | SCALE 5:1 | SHEET 2 OF 2 | 1 OF 2 R | REV 15 | N/P -

(N/A) PROCESS SENSITIVE DIMENSION

DIMENSIONS ENCLOSED IN ( ) INDICATES REFERENCE DIMENSIONS AND NO TOLERANCE IS TO BE ESTABLISHED.

DIMENSIONAL RANGE (MM)									
FROM	>0	>3	>6	>10	>30	>100	>200	>300	>400
TO	3	6	10	30	100	200	300	400	500
TOLERANCE UNLESS OTHERWISE SPECIFIED									
±0.25	±0.25	±0.25	±0.25	±0.25	±0.25	±0.25	±0.25	±0.25	±0.25
ANGULAR TOLERANCE ±0°									

THIRD ANGLE PROJECTION | DO NOT SCALE | USE MATH DATA | NX

ALL DIMENSIONS ARE IN MILLIMETERS

REFERENCE

LINE DRAWN THROUGH A PART NUMBER INDICATES THAT PHYSICAL PARTS ARE NOT AVAILABLE FOR ORDERING.

PART NUMBERS THAT DO NOT HAVE A LINE PRESENT INDICATE THAT PHYSICAL PARTS ARE AVAILABLE FOR ORDERING.

CONTACT APTIV SALES TO ASSURE AVAILABILITY OF PARTS.

DWG TYPE: PART DRAWING

STYLE

VOLUME (CM³)

SYSTEM CODE

UNLESS OTHERWISE SPECIFIED
THIS DOCUMENT IS IN ACCORDANCE WITH ASME Y14.5M-1994 UNLESS OTHERWISE SPECIFIED. DIMENSIONS AND TOLERANCING MAXIMUM MATERIAL, SEPARATE PATTERNS OF FEATURES MAY BE GAGED SEPARATELY REGARDLESS OF DATUM REFERENCES.

COPYRIGHT 2013 APTIV, ALL RIGHTS RESERVED.
THIS DRAWING IS THE PROPERTY OF APTIV AND CONTAINS APTIV CONFIDENTIAL INFORMATION. ANY REPRODUCTION, DISTRIBUTION OR UTILIZATION OF THIS DOCUMENT OR ITS RELATED CAD MATH DATA, WE WILL BE COMMUNICATION OF ANY CONTENT TO OTHERS, WITHOUT EXPRESS AUTHORIZATION, IS PROHIBITED.

•APTIV•
CONNECTION SYSTEMS
WARREN, OH

		DATE
DR		
APVD1	HECTOR CLAUDIO	16JA13
APVD2	HECTOR CLAUDIO	17JA13
APVD3	GERARDO GOMEZ J.	18JA13
APVD4		
APVD5		

SUBSTANCES OF CONCERN AND RECYCLED CONTENT PER APTIV (DRAWING)

TITLE
SEE CHART

DRAWING NAME
TAX! ASM CONN 8 F OCS 1.5 SLD

DRAWING NUMBER 15514673
A1x3 | SCALE 5:1 | SHEET 1 OF 2 | 1 OF 2 R | REV 15 | N/P -

Page 1 of 2
Filename: 15514673.DWG
Date: 08-Mar-22
Time: 15:11:38
Model: 15514673
Part: 15514673
Rev: 15
Sheet: 1 of 2

Mouser Electronics

Authorized Distributor

Click to View Pricing, Inventory, Delivery & Lifecycle Information:

Aptiv:
15514670