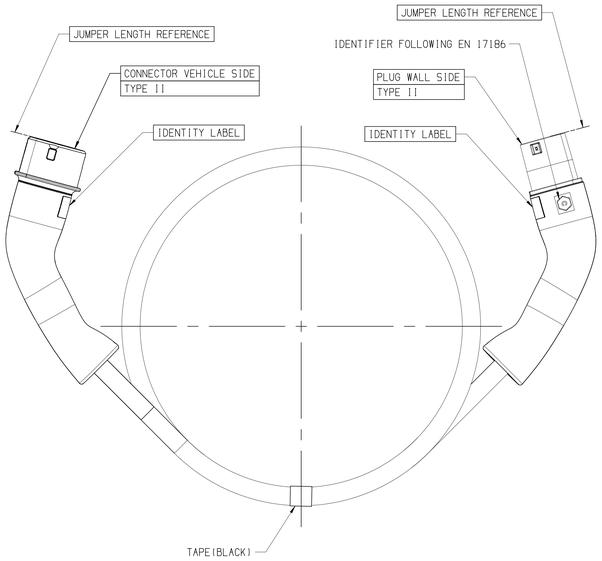


TECHNICAL CHARACTERISTICS :

1 - OPERATING TEMPERATURE : -40°C TO +50°C
2 - MATING ENDURANCE : 10,000 CYCLES
3 - PROTECTION LEVEL : IP2X CONNECTOR NOT MATED
4 - PROTECTION LEVEL : IP44 CONNECTOR MATED
5 - APTIV PRODUCT SPECIFICATION : 35742803-CUS74
6 - HANDLING MANUAL : 35742803-CUS73
7 - INTERFACE CONFORME TO : IEC 62196-2
  - CONNECTOR VEHICLE SIDE TYPE II
    INTERFACE CONFORM TO IEC 62196-2:2016 EDITION 2.0 STANDARD SHEET 2-IIe
  - PLUG WALL SIDE TYPE II
    INTERFACE CONFORM TO IEC 62196-2:2016 EDITION 2.0 STANDARD SHEET 2-IIb
8 - COMPLIES TO EN17186:2019 - ALTERNATIVE FUEL MARKING
9 - SERIAL NUMBER DEFINITION :
PLANT CODE (PP) / JUMPER TYPE / JUMPER CODE (JC) / YEAR (YY) / MONTH (MM) / DAY (DD) / CALENDAR DAY (CCC) / LINE ID (X) / NUMBER OF THE PART (ZZZZZ)

| PHASE | RATED VOLTAGE (V AC) | RATED CURRENT (A) | FREQUENCY (Hz) | TOTAL JUMPER LENGTH (see reference) | VISIBLE CABLE LENGTH | APTIV P/N | APTIV REVISION | MASS OF THE PRODUCT (kg) | CERTIFICATION OF CONFORMITY 'CE' | CERTIFICATION OF CONFORMITY 'UK' |
|---|---|---|---|---|---|---|---|---|---|---|
| THREE | 480 | 32 | 50/60 | 4.0m±2.5% | 3.5m±2.5% | 35741601 | 01 | 2.39 | CAQE 0421/52 | CAQE 0421/57 |
| | | | | 4.5m±2.5% | 4.0m±2.5% | 35741602 | 01 | 2.62 | | |
| | | | | 5.0m±2.5% | 4.5m±2.5% | 35741603 | 01 | 2.85 | | |
| | | | | 5.5m±2.5% | 5.0m±2.5% | 35741606 | 01 | 3.08 | | |
| | | | | 6.0m±2.5% | 5.5m±2.5% | 35741608 | 01 | 3.32 | | |
| | | | | 6.5m±2.5% | 6.0m±2.5% | 35741612 | 01 | 3.55 | | |
| | | | | 7.0m±2.5% | 6.5m±2.5% | 35741614 | 01 | 3.78 | | |
| | | | | 7.5m±2.5% | 7.0m±2.5% | 35741615 | 01 | 4.02 | | |
| | | | | 8.0m±2.5% | 7.5m±2.5% | 35741618 | 01 | 4.25 | | |
| | | | | 8.5m±2.5% | 8.0m±2.5% | 35741619 | 01 | 4.48 | | |
| | | | | 9.0m±2.5% | 8.5m±2.5% | 35741620 | 01 | 4.72 | | |
| | | | | 9.5m±2.5% | 9.0m±2.5% | 35741622 | 01 | 4.95 | | |
| | | 20 | 50/60 | 4.0m±2.5% | 3.5m±2.5% | 35741654 | 01 | 1.76 | CAQE 0421/52 | CAQE 0421/57 |
| | | | | 4.5m±2.5% | 4.0m±2.5% | 35741655 | 01 | 1.91 | | |
| | | | | 5.0m±2.5% | 4.5m±2.5% | 35741656 | 01 | 2.06 | | |
| | | | | 5.5m±2.5% | 5.0m±2.5% | 35741657 | 01 | 2.21 | | |
| | | | | 6.0m±2.5% | 5.5m±2.5% | 35741658 | 01 | 2.36 | | |
| | | | | 6.5m±2.5% | 6.0m±2.5% | 35741659 | 01 | 2.51 | | |
| | | | | 7.0m±2.5% | 6.5m±2.5% | 35741660 | 01 | 2.66 | | |
| | | | | 7.5m±2.5% | 7.0m±2.5% | 35741661 | 01 | 2.81 | | |
| | | | | 8.0m±2.5% | 7.5m±2.5% | 35741662 | 01 | 2.96 | | |
| | | | | 8.5m±2.5% | 8.0m±2.5% | 35741664 | 01 | 3.11 | | |
| | | | | 9.0m±2.5% | 8.5m±2.5% | 35741666 | 01 | 3.26 | | |
| | | | | 9.5m±2.5% | 9.0m±2.5% | 35741667 | 01 | 3.41 | | |
| MONO | 250 | 32 | 50/60 | 4.0m±2.5% | 3.5m±2.5% | 35741623 | 01 | 1.60 | CAQE 0421/53 | CAQE 0421/58 |
| | | | | 4.5m±2.5% | 4.0m±2.5% | 35741624 | 01 | 1.73 | | |
| | | | | 5.0m±2.5% | 4.5m±2.5% | 35741625 | 01 | 1.86 | | |
| | | | | 5.5m±2.5% | 5.0m±2.5% | 35741631 | 01 | 1.99 | | |
| | | | | 6.0m±2.5% | 5.5m±2.5% | 35741632 | 01 | 2.12 | | |
| | | | | 6.5m±2.5% | 6.0m±2.5% | 35741642 | 01 | 2.25 | | |
| | | | | 7.0m±2.5% | 6.5m±2.5% | 35741643 | 01 | 2.38 | | |
| | | | | 7.5m±2.5% | 7.0m±2.5% | 35741644 | 01 | 2.51 | | |
| | | | | 8.0m±2.5% | 7.5m±2.5% | 35741645 | 01 | 2.64 | | |
| | | | | 8.5m±2.5% | 8.0m±2.5% | 35741647 | 01 | 2.77 | | |
| | | | | 9.0m±2.5% | 8.5m±2.5% | 35741649 | 01 | 2.9 | | |
| | | | | 9.5m±2.5% | 9.0m±2.5% | 35741650 | 01 | 3.03 | | |
| | | 20 | 50/60 | 4.0m±2.5% | 3.5m±2.5% | 35741704 | 01 | 1.14 | CAQE 0421/55 | CAQE 0421/60 |
| | | | | 4.5m±2.5% | 4.0m±2.5% | 35741706 | 01 | 1.27 | | |
| | | | | 5.0m±2.5% | 4.5m±2.5% | 35741708 | 01 | 1.34 | | |
| | | | | 5.5m±2.5% | 5.0m±2.5% | 35741710 | 01 | 1.41 | | |
| | | | | 6.0m±2.5% | 5.5m±2.5% | 35741712 | 01 | 1.48 | | |
| | | | | 6.5m±2.5% | 6.0m±2.5% | 35741714 | 01 | 1.55 | | |
| | | | | 7.0m±2.5% | 6.5m±2.5% | 35741716 | 01 | 1.62 | | |
| | | | | 7.5m±2.5% | 7.0m±2.5% | 35741719 | 01 | 1.69 | | |
| | | | | 8.0m±2.5% | 7.5m±2.5% | 35741721 | 01 | 1.76 | | |
| | | | | 8.5m±2.5% | 8.0m±2.5% | 35741723 | 01 | 1.83 | | |
| | | | | 9.0m±2.5% | 8.5m±2.5% | 35741725 | 01 | 1.90 | | |
| | | | | 9.5m±2.5% | 9.0m±2.5% | 35741727 | 01 | 1.97 | | |

CONNECTOR VEHICLE SIDE TYPE II

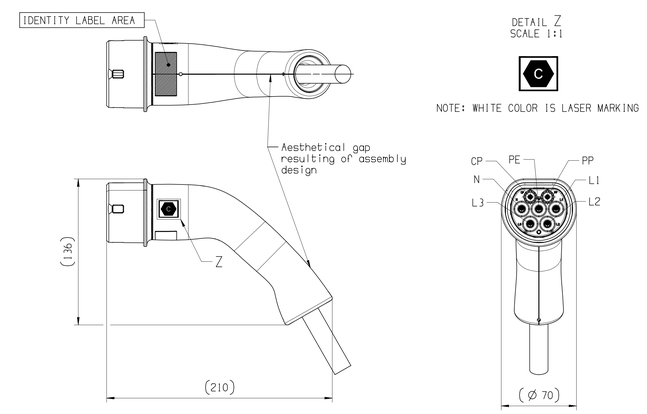


PLUG WALL SIDE TYPE II

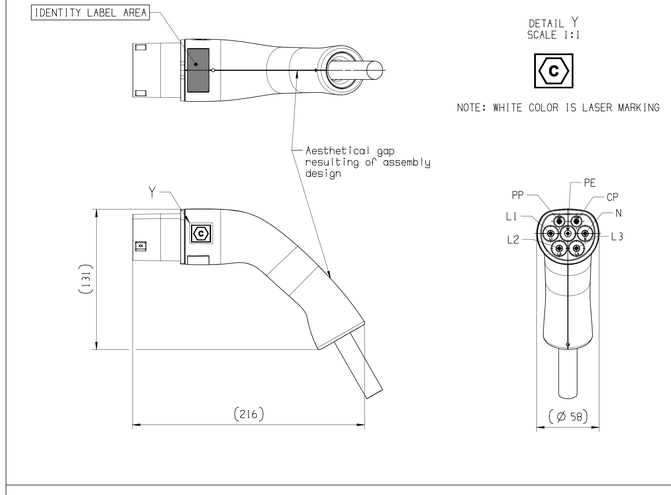


HIGH-VOLTAGE CHARGING CABLE
FOR ELECTRIC VEHICLES
FLAME-RETARDANT AND HALOGENFREE,BARE COPPER WIRES
COLOR: BLACK
ACCORDING TO EN 50620

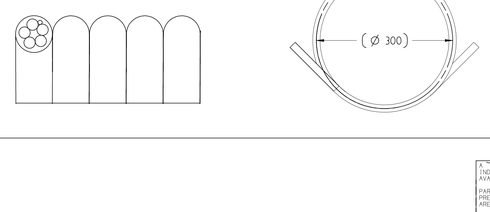


| DWG STATUS | | | | | ZONE | REVISION HISTORY | AUTH | DR | APVD 1 | APVD 2 |
|---|---|---|---|---|---|---|---|---|---|---|
| DATE | STG | REV | N/P | CHG | | | | | | |
| 27JN23 | R | 01 | - | - | - | INITIAL RELEASE | | V.RAN | R.ASH | R.LEI |

A LINE DRAWN THROUGH A PART NUMBER INDICATES THAT PHYSICAL PARTS ARE NOT AVAILABLE FOR ORDERING.

PART NUMBERS THAT DO NOT HAVE A LINE PRESENT INDICATE THAT PHYSICAL PARTS ARE AVAILABLE FOR ORDERING.

CONTACT APTIV SALES TO ASSURE AVAILABILITY OF PARTS.

R 0.1 MAX
R 0.2 MAX
SHARP CORNER TOLERANCE

| DIM TO CHECK / DIM FOR HELP / THEORETIC DIM | DIMENSIONAL RANGE (MM) FROM / TO | > 0 / 20 | > 20 / 30 | > 30 / 70 | > 70 / 100 | > 100 / 150 | > 150 / 200 | > 200 / 250 | > 250 / 300 | > 300 / 400 |
|---|---|---|---|---|---|---|---|---|---|---|
| | TOLERANCE UNLESS OTHERWISE SPECIFIED | ±0.15 | ±0.2 | ±0.3 | ±0.4 | ±0.5 | ±0.6 | ±0.8 | ±1 | ±1.2 |
| | ANGULAR TOLERANCE ±2° | | | | | | | | | |

DWG TYP
PART DRAWING
WEIGHT (GR) ---
VOLUME (CM³) ---
ROUTING ---
DISTR CODE D
UNLESS OTHERWISE SPECIFIED

GENERAL TOLERANCES ACCORDING TO: SEE TABLE

GD&T ACCORDING TO: ISO 1101

REFERENCE

FIRST ANGLE PROJECTION

DO NOT SCALE

USE MATH DATA

NX

•APTIV•

CONNECTION SYSTEMS
Chennai, India

COPYRIGHT 2023 APTIV. ALL RIGHTS RESERVED.

THIS DRAWING IS THE PROPERTY OF APTIV AND CONTAINS APTIV CONFIDENTIAL INFORMATION. THE REPRODUCTION, DISTRIBUTION AND UTILIZATION OF THIS DOCUMENT OR ITS RELATED CAD MATH DATA, AS WELL AS COMMUNICATION OF ANY CONTENT TO OTHERS, WITHOUT EXPRESS AUTHORIZATION, IS PROHIBITED.

CE PLAN EST LE PROPRIETE DE APTIV ET CONTIENT DES INFORMATIONS APTIV CONFIDENTIELLES. LA REPRODUCTION, LA DISTRIBUTION ET L'UTILISATION DE CE DOCUMENT OU DE SES CONNÉES MATHÉMATIQUES CAD, AINSI QUE LA COMMUNICATION DE TOUT CONTENU À AUTRUI, SANS AUTORISATION EXPRESSE EST INTERDITE.

| | | DATE |
|---|---|---|
| DR | V.RANGANADH | 02JA23 |
| APVD1 | R.ASHOK | 02JA23 |
| APVD2 | R.LEININGER | 27JN23 |
| APVD3 | | |
| APVD4 | | |
| APVD5 | | |

SUBSTANCES OF CONCERN AND RECYCLED CONTENT PER APTIV (1949001)
MATIERES PRIOSCRITES ET CONTENU RECYCLABLE SELON APTIV (1949001)

MATERIAL
SEE SHEET 2

DRAWING NAME
JUMPER T2-T2 FAST CHARGE CONNECTOR GENERIC

DRAWING NUMBER
35742803

| SIZE | SCALE | FRAME NO | SHEET NO | STG | REV | N/P |
|---|---|---|---|---|---|---|
| A0 | 1:2 | 1 OF 1 | 1 OF 4 | R | 01 | - |

CONTROLLED DOCUMENTS ARE ONLY AVAILABLE ON THE SERVER

Time: 19:25:06
Date: 05-Jul-23
User: K.PRAJWAL
Path: 35742803-CUS1-SDL01
Name: 35742803-CUS1-SDL01.prt

# THREE PHASE PRODUCTS

PRE-ASSEMBLY COUPLER
PARTS BILL OF MATERIALS

| | | | THREE PHASES 32A | | | | | | | | | | | |
|---|---|---|---|---|---|---|---|---|---|---|---|---|---|---|
| | | | 35741601 | 35741602 | 35741603 | 35741606 | 35741608 | 35741612 | 35741614 | 35741615 | 35741618 | 35741619 | 35741620 | 35741622 |
| POS | DESCRIPTION | MATERIAL | QTY | QTY | QTY | QTY | QTY | QTY | QTY | QTY | QTY | QTY | QTY | QTY |
| 1 | FEMALE HOUSING | PA6 GF30 | 1X FEMALE HOUSING 7 WAY | | | | | | | | | | | |
| 2 | MALE HOUSING | PA6 GF30 | 1X MALE HOUSING 7 WAY | | | | | | | | | | | |
| 3 | TPA UPPER | PBT GF30 | 2 | 2 | 2 | 2 | 2 | 2 | 2 | 2 | 2 | 2 | 2 | 2 |
| 4 | TPA LOWER | PBT GF30 | 2 | 2 | 2 | 2 | 2 | 2 | 2 | 2 | 2 | 2 | 2 | 2 |
| 5 | RIGHT SHELL | PA6 GF30 | 2 | 2 | 2 | 2 | 2 | 2 | 2 | 2 | 2 | 2 | 2 | 2 |
| 6 | LEFT SHELL WITH "C" MARKING CONNECTOR SIDE | PA6 GF30 | 1 | 1 | 1 | 1 | 1 | 1 | 1 | 1 | 1 | 1 | 1 | 1 |
| 7 | LEFT SHELL WITH "C" MARKING PLUG SIDE | PA6 GF30 | 1 | 1 | 1 | 1 | 1 | 1 | 1 | 1 | 1 | 1 | 1 | 1 |
| 8 | CABLE RETAINER | PA6 GF30 | 2X CABLE RETAINER 5G6 | | | | | | | | | | | |
| 9 | POWER FEMALE TERMINAL | COPPER ALLOY Ag PLATING | 5X6mm² | | | | | | | | | | | |
| 10 | POWER MALE TERMINAL WITHOUT CAP | COPPER ALLOY Ag PLATING | 1X6mm² | | | | | | | | | | | |
| 11 | POWER MALE TERMINAL WITH CAP | COPPER ALLOY Ag PLATING | 4X6mm² | | | | | | | | | | | |
| 12 | MALE TERMINAL CP | COPPER ALLOY Ag PLATING | 1 | 1 | 1 | 1 | 1 | 1 | 1 | 1 | 1 | 1 | 1 | 1 |
| 13 | MALE TERMINAL PP | COPPER ALLOY Ag PLATING | 1 | 1 | 1 | 1 | 1 | 1 | 1 | 1 | 1 | 1 | 1 | 1 |
| 14 | CP AND PP FEMALE TERMINALS | COPPER ALLOY Ag PLATING | 2 | 2 | 2 | 2 | 2 | 2 | 2 | 2 | 2 | 2 | 2 | 2 |
| 15 | BARBS STEEL | STAINLESS STEEL | 16 | 16 | 16 | 16 | 16 | 16 | 16 | 16 | 16 | 16 | 16 | 16 |
| 16 | SHRINK TUBE FOR SIGNAL CRIMPING | - | 2 | 2 | 2 | 2 | 2 | 2 | 2 | 2 | 2 | 2 | 2 | 2 |
| 17 | SHRINK TUBE FOR POWER CRIMPING | - | 5 | 5 | 5 | 5 | 5 | 5 | 5 | 5 | 5 | 5 | 5 | 5 |
| 18 | TUBE FOR POWER PE | PA6 GF30 | 1 | 1 | 1 | 1 | 1 | 1 | 1 | 1 | 1 | 1 | 1 | 1 |
| 19 | SWS SUB ASSEMBLY TUBE | - | 4X6mm² | | | | | | | | | | | |
| 20 | SWS SUB ASSEMBLY TUBE | - | 2X0.5mm² | | | | | | | | | | | |
| 21 | SWS SUB ASSEMBLY TUBE | - | 5X6mm² | | | | | | | | | | | |
| 22 | SWS SUB ASSEMBLY TUBE | - | 2X0.5mm² | | | | | | | | | | | |
| 23 | FEMALE RESISTOR SUB ASSEMBLY | - | 1X220 Ohm | | | | | | | | | | | |
| 24 | MALE RESISTOR SUB ASSEMBLY | - | 1X220 Ohm | | | | | | | | | | | |
| 25 | SPLICE | CuZn30 | 1X6mm² | | | | | | | | | | | |
| 26 | SHRINK TUBE | - | 1 | 1 | 1 | 1 | 1 | 1 | 1 | 1 | 1 | 1 | 1 | 1 |
| 27 | CABLE (VISIBLE LENGTH) | Pu(JACKET) | 3.50 | 4.00 | 4.50 | 5.00 | 5.50 | 6.00 | 6.50 | 7.00 | 7.50 | 8.00 | 8.50 | 9.00 |
| 28 | SECURITY LABEL | NA | 2 | 2 | 2 | 2 | 2 | 2 | 2 | 2 | 2 | 2 | 2 | 2 |
| 29 | SAFETY INSTRUCTION CARD | NA | 1 | 1 | 1 | 1 | 1 | 1 | 1 | 1 | 1 | 1 | 1 | 1 |

| | | | THREE PHASES 20A | | | | | | | | | | | |
|---|---|---|---|---|---|---|---|---|---|---|---|---|---|---|
| | | | 35741654 | 35741655 | 35741656 | 35741657 | 35741658 | 35741659 | 35741660 | 35741661 | 35741662 | 35741664 | 35741666 | 35741667 |
| POS | DESCRIPTION | MATERIAL | QTY | QTY | QTY | QTY | QTY | QTY | QTY | QTY | QTY | QTY | QTY | QTY |
| 1 | FEMALE HOUSING | PA6 GF30 | 1X FEMALE HOUSING 7 WAY | | | | | | | | | | | |
| 2 | MALE HOUSING | PA6 GF30 | 1X MALE HOUSING 7 WAY | | | | | | | | | | | |
| 3 | TPA UPPER | PBT GF30 | 2 | 2 | 2 | 2 | 2 | 2 | 2 | 2 | 2 | 2 | 2 | 2 |
| 4 | TPA LOWER | PBT GF30 | 2 | 2 | 2 | 2 | 2 | 2 | 2 | 2 | 2 | 2 | 2 | 2 |
| 5 | RIGHT SHELL | PA6 GF30 | 2 | 2 | 2 | 2 | 2 | 2 | 2 | 2 | 2 | 2 | 2 | 2 |
| 6 | LEFT SHELL WITH "C" MARKING CONNECTOR SIDE | PA6 GF30 | 1 | 1 | 1 | 1 | 1 | 1 | 1 | 1 | 1 | 1 | 1 | 1 |
| 7 | LEFT SHELL WITH "C" MARKING PLUG SIDE | PA6 GF30 | 1 | 1 | 1 | 1 | 1 | 1 | 1 | 1 | 1 | 1 | 1 | 1 |
| 8 | CABLE RETAINER | PA6 GF30 | 2X CABLE RETAINER 3G6 | | | | | | | | | | | |
| 9 | POWER FEMALE TERMINAL | COPPER ALLOY Ag PLATING | 5X2.5mm² | | | | | | | | | | | |
| 10 | POWER MALE TERMINAL WITHOUT CAP | COPPER ALLOY Ag PLATING | 1X2.5mm² | | | | | | | | | | | |
| 11 | POWER MALE TERMINAL WITH CAP | COPPER ALLOY Ag PLATING | 4X2.5mm² | | | | | | | | | | | |
| 12 | MALE TERMINAL CP | COPPER ALLOY Ag PLATING | 1 | 1 | 1 | 1 | 1 | 1 | 1 | 1 | 1 | 1 | 1 | 1 |
| 13 | MALE TERMINAL PP | COPPER ALLOY Ag PLATING | 1 | 1 | 1 | 1 | 1 | 1 | 1 | 1 | 1 | 1 | 1 | 1 |
| 14 | CP AND PP FEMALE TERMINALS | COPPER ALLOY Ag PLATING | 2 | 2 | 2 | 2 | 2 | 2 | 2 | 2 | 2 | 2 | 2 | 2 |
| 15 | BARBS STEEL | STAINLESS STEEL | 16 | 16 | 16 | 16 | 16 | 16 | 16 | 16 | 16 | 16 | 16 | 16 |
| 16 | SHRINK TUBE FOR SIGNAL CRIMPING | - | 2 | 2 | 2 | 2 | 2 | 2 | 2 | 2 | 2 | 2 | 2 | 2 |
| 17 | SHRINK TUBE FOR POWER CRIMPING | - | 5 | 5 | 5 | 5 | 5 | 5 | 5 | 5 | 5 | 5 | 5 | 5 |
| 18 | TUBE FOR POWER PE | PA6 GF30 | 1 | 1 | 1 | 1 | 1 | 1 | 1 | 1 | 1 | 1 | 1 | 1 |
| 19 | SWS SUB ASSEMBLY TUBE | - | 4X2.5mm² | | | | | | | | | | | |
| 20 | SWS SUB ASSEMBLY TUBE | - | 2X0.5mm² | | | | | | | | | | | |
| 21 | SWS SUB ASSEMBLY TUBE | - | 5X2.5mm² | | | | | | | | | | | |
| 22 | SWS SUB ASSEMBLY TUBE | - | 2X0.5mm² | | | | | | | | | | | |
| 23 | FEMALE RESISTOR SUB ASSEMBLY | - | 1X680 Ohm | | | | | | | | | | | |
| 24 | MALE RESISTOR SUB ASSEMBLY | - | 1X680 Ohm | | | | | | | | | | | |
| 25 | SPLICE | CuZn30 | 1X2.5mm² | | | | | | | | | | | |
| 26 | SHRINK TUBE | - | 1 | 1 | 1 | 1 | 1 | 1 | 1 | 1 | 1 | 1 | 1 | 1 |
| 27 | CABLE (VISIBLE LENGTH) | Pu(JACKET) | 3.50 | 4.00 | 4.50 | 5.00 | 5.50 | 6.00 | 6.50 | 7.00 | 7.50 | 8.00 | 8.50 | 9.00 |
| 28 | SECURITY LABEL | NA | 2 | 2 | 2 | 2 | 2 | 2 | 2 | 2 | 2 | 2 | 2 | 2 |
| 29 | SAFETY INSTRUCTION CARD | NA | 1 | 1 | 1 | 1 | 1 | 1 | 1 | 1 | 1 | 1 | 1 | 1 |

| | | | THREE PHASES 32A - WITH PROTECTIVE CAP | | | | | | | | | | | |
|---|---|---|---|---|---|---|---|---|---|---|---|---|---|---|
| POS | DESCRIPTION | MATERIAL | 35741600 | 35741604 | 35741648 | 35741651 | 35741653 | 35741663 | 35741665 | 35741668 | 35741675 | 35741676 | 35741677 | 35741678 |
| | JUMPER | | 1 | 1 | 1 | 1 | 1 | 1 | 1 | 1 | 1 | 1 | 1 | 1 |
| 30 | FEMALE PROTECTIVE CAP | TPS-SEBS | 1 | 1 | 1 | 1 | 1 | 1 | 1 | 1 | 1 | 1 | 1 | 1 |
| 31 | MALE PROTECTIVE CAP | TPS-SEBS | 1 | 1 | 1 | 1 | 1 | 1 | 1 | 1 | 1 | 1 | 1 | 1 |

| | | | THREE PHASES 20A - WITH PROTECTIVE CAP | | | | | | | | | | | |
|---|---|---|---|---|---|---|---|---|---|---|---|---|---|---|
| POS | DESCRIPTION | MATERIAL | 35741695 | 35741696 | 35741697 | 35741698 | 35741699 | 35741700 | 35741701 | 35741702 | 35741703 | 35741705 | 35741707 | 35741709 |
| | JUMPER | | 1 | 1 | 1 | 1 | 1 | 1 | 1 | 1 | 1 | 1 | 1 | 1 |
| 30 | FEMALE PROTECTIVE CAP | TPS-SEBS | 1 | 1 | 1 | 1 | 1 | 1 | 1 | 1 | 1 | 1 | 1 | 1 |
| 31 | MALE PROTECTIVE CAP | TPS-SEBS | 1 | 1 | 1 | 1 | 1 | 1 | 1 | 1 | 1 | 1 | 1 | 1 |

| | | | THREE PHASES 32A - WITH PROTECTIVE CAP AND SOFT BAG | | | | | | | | | | | |
|---|---|---|---|---|---|---|---|---|---|---|---|---|---|---|
| POS | DESCRIPTION | MATERIAL | 35742067 | 35742068 | 35742069 | 35742070 | 35742071 | 35742072 | 35742073 | 35742074 | 35742075 | 35742076 | 35742077 | 35742078 |
| | JUMPER | | 1 | 1 | 1 | 1 | 1 | 1 | 1 | 1 | 1 | 1 | 1 | 1 |
| 30 | FEMALE PROTECTIVE CAP | TPS-SEBS | 1 | 1 | 1 | 1 | 1 | 1 | 1 | 1 | 1 | 1 | 1 | 1 |
| 31 | MALE PROTECTIVE CAP | TPS-SEBS | 1 | 1 | 1 | 1 | 1 | 1 | 1 | 1 | 1 | 1 | 1 | 1 |
| 32 | SOFT BAG | | 1 | 1 | 1 | 1 | 1 | 1 | 1 | 1 | 1 | 1 | 1 | 1 |

| | | | THREE PHASES 20A - WITH PROTECTIVE CAP AND SOFT BAG | | | | | | | | | | | |
|---|---|---|---|---|---|---|---|---|---|---|---|---|---|---|
| POS | DESCRIPTION | MATERIAL | 35742103 | 35742104 | 35742106 | 35742107 | 35742109 | 35742110 | 35742114 | 35742115 | 35742118 | 35742121 | 35742123 | 35742125 |
| | JUMPER | | 1 | 1 | 1 | 1 | 1 | 1 | 1 | 1 | 1 | 1 | 1 | 1 |
| 30 | FEMALE PROTECTIVE CAP | TPS-SEBS | 1 | 1 | 1 | 1 | 1 | 1 | 1 | 1 | 1 | 1 | 1 | 1 |
| 31 | MALE PROTECTIVE CAP | TPS-SEBS | 1 | 1 | 1 | 1 | 1 | 1 | 1 | 1 | 1 | 1 | 1 | 1 |
| 32 | SOFT BAG | | 1 | 1 | 1 | 1 | 1 | 1 | 1 | 1 | 1 | 1 | 1 | 1 |

| | | | THREE PHASES 32A - WITH SOFT BAG | | | | | | | | | | | |
|---|---|---|---|---|---|---|---|---|---|---|---|---|---|---|
| POS | DESCRIPTION | MATERIAL | 35742108 | 35742111 | 35742116 | 35742119 | 35742122 | 35742124 | 35742126 | 35742127 | 35742129 | 35742130 | 35742131 | 35742132 |
| | JUMPER | | 1 | 1 | 1 | 1 | 1 | 1 | 1 | 1 | 1 | 1 | 1 | 1 |
| 32 | SOFT BAG | | 1 | 1 | 1 | 1 | 1 | 1 | 1 | 1 | 1 | 1 | 1 | 1 |

| | | | THREE PHASES 20A - WITH SOFT BAG | | | | | | | | | | | |
|---|---|---|---|---|---|---|---|---|---|---|---|---|---|---|
| POS | DESCRIPTION | MATERIAL | 35742159 | 35742160 | 35742162 | 35742163 | 35742164 | 35742165 | 35742166 | 35742167 | 35742168 | 35742170 | 35742171 | 35742172 |
| | JUMPER | | 1 | 1 | 1 | 1 | 1 | 1 | 1 | 1 | 1 | 1 | 1 | 1 |
| 32 | SOFT BAG | | 1 | 1 | 1 | 1 | 1 | 1 | 1 | 1 | 1 | 1 | 1 | 1 |

CONNECTOR VEHICLE SIDE TYPE II

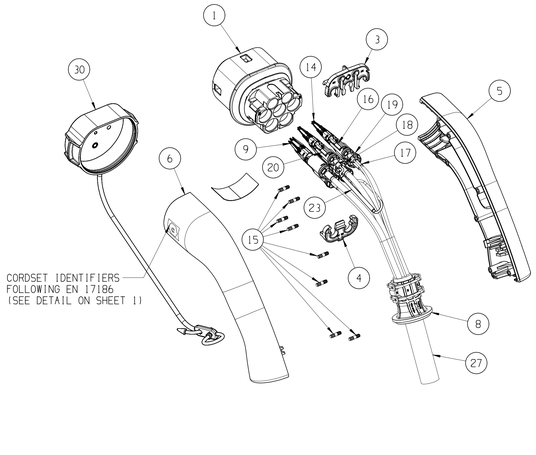


PLUG WALL SIDE TYPE II

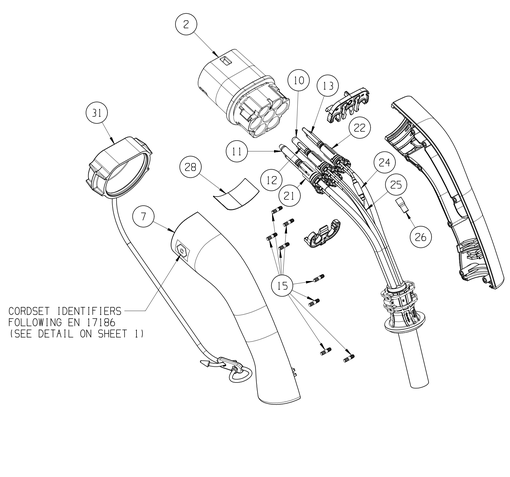


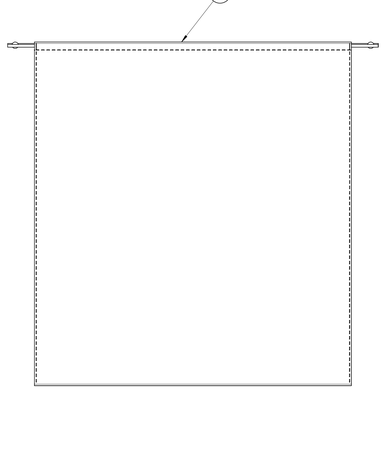


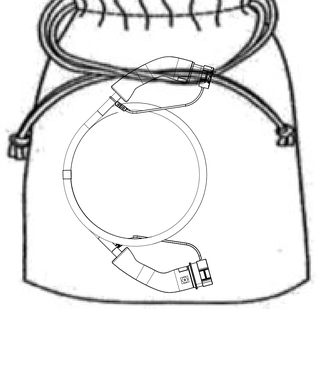

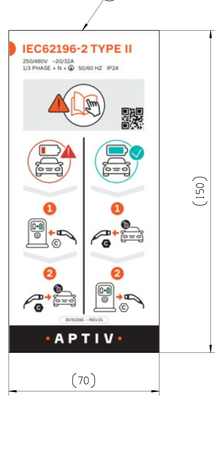


| DWG STATUS | | | | | ZONE | REVISION HISTORY | AUTH | DR | APVD 1 | APVD 2 |
|---|---|---|---|---|---|---|---|---|---|---|
| DATE | STG | REV | N/P | CHG | | | | | | |
| 27JN23 | R | 01 | - | - | - | INITIAL RELEASE | | V.RAN | R.ASH | R.LEI |

DWG TYP
PART DRAWING

| WEIGHT (GM) | DISTR CODE |
|---|---|
| --- | D |
| VOLUME (CM³) | |
| --- | |
| ROUTING | |

UNLESS OTHERWISE SPECIFIED

GENERAL TOLERANCES ACCORDING TO: SEE TABLE

GD&T ACCORDING TO: ISO 1101

REFERENCE

FIRST ANGLE PROJECTION

DO NOT SCALE

USE MATH DATA

A LINE DRAWN THROUGH A PART NUMBER INDICATES THAT PHYSICAL PARTS ARE NOT AVAILABLE FOR ORDERING.

PART NUMBERS THAT DO NOT HAVE A LINE PRESENT INDICATE THAT PHYSICAL PARTS ARE AVAILABLE FOR ORDERING.

CONTACT APTIV SALES TO ASSURE AVAILABILITY OF PARTS.

R 0.1 MAX
R 0.2 MAX
SHARP CORNER TOLERANCE

| | DIMENSIONAL RANGE (MM) | | | | | | | | | | | CHART E1 |
|---|---|---|---|---|---|---|---|---|---|---|---|---|
| DIM TO CHECK | FROM | > 0 | > 20 | > 30 | > 70 | >100 | >150 | >200 | >250 | >300 | | |
| DIM FOR HELP | TO | 20 | 30 | 70 | 100 | 150 | 200 | 250 | 300 | 400 | | |
| | TOLERANCE UNLESS OTHERWISE SPECIFIED | | | | | | | | | | | |
| THEORETIC DIM | | ±0.15 | ±0.2 | ±0.3 | ±0.4 | ±0.5 | ±0.6 | ±0.8 | ±1 | ±1.2 | | |
| | ANGULAR TOLERANCE ±2° | | | | | | | | | | | |

•APTIV•

CONNECTION SYSTEMS
Manesar, India

COPYRIGHT 2023 APTIV. ALL RIGHTS RESERVED.

THIS DRAWING IS THE PROPERTY OF APTIV AND CONTAINS APTIV CONFIDENTIAL INFORMATION. THE REPRODUCTION, DISTRIBUTION AND UTILIZATION OF THIS DOCUMENT OR ITS RELATED CAD MATH DATA, AS WELL AS COMMUNICATION OF ANY CONTENT TO OTHERS, WITHOUT EXPRESS AUTHORIZATION, IS PROHIBITED.

CE PLAN EST LE PROPRIETE DE APTIV ET CONTIENT DES INFORMATIONS APTIV CONFIDENTIELLES. LA REPRODUCTION, LA DISTRIBUTION ET L'UTILISATION DE CE DOCUMENT OU DE SES CONNEES MATHEMATIQUES CAD, AINSI QUE LA COMMUNICATION DE TOUT CONTENU À AUTRUI, SANS AUTORISATION EXPRESSE EST INTERDITE.

| | | DATE |
|---|---|---|
| DR | V.RANGANADH | 02JA23 |
| APVD1 | R.ASHOK | 02JA23 |
| APVD2 | R.LEININGER | 27JN23 |
| APVD3 | | |
| APVD4 | | |
| APVD5 | | |

SUBSTANCES OF CONCERN AND RECYCLED CONTENT PER APTIV 1094900I
MATIERES PROSCRITES ET CONTENU RECYCLABLE SELON APTIV 1094900I

MATERIAL
SEE TABLE

DRAWING NAME
JUMPER T2-T2 FAST CHARGE CONNECTOR GENERIC

DRAWING NUMBER
35742803

| SIZE | SCALE | FRAME NO | SHEET NO | STG | REV | N/P |
|---|---|---|---|---|---|---|
| A0 | 1:2 | 1 OF 1 | 2 OF 4 | R | 01 | - |

User: k7294
PTS: 1970250 Size: 1.05MB Date: 05-Jul-23 Time: 19:52:29
Page Count: 1 Page Name: 35742803_01_02_03_04

# MONO PHASE PRODUCTS

PRE-ASSEMBLY COUPLER
PARTS BILL OF MATERIALS

| | | | MONO PHASES 32A | | | | | | | | | | | |
|---|---|---|---|---|---|---|---|---|---|---|---|---|---|---|
| | | | 35741623 | 35741624 | 35741625 | 35741631 | 35741632 | 35741642 | 35741643 | 335741644 | 35741645 | 35741647 | 35741649 | 35741650 |
| POS | DESCRIPTION | MATERIAL | QTY | QTY | QTY | QTY | QTY | QTY | QTY | QTY | QTY | QTY | QTY | QTY |
| 1 | FEMALE HOUSING | PA6 GF30 | 1X FEMALE HOUSING 5 WAY | | | | | | | | | | | |
| 2 | MALE HOUSING | PA6 GF30 | 1X MALE HOUSING 5 WAY | | | | | | | | | | | |
| 3 | TPA UPPER | PBT GF30 | 2 | 2 | 2 | 2 | 2 | 2 | 2 | 2 | 2 | 2 | 2 | 2 |
| 4 | TPA LOWER | PBT GF30 | 2 | 2 | 2 | 2 | 2 | 2 | 2 | 2 | 2 | 2 | 2 | 2 |
| 5 | RIGHT SHELL | PA6 GF30 | 2 | 2 | 2 | 2 | 2 | 2 | 2 | 2 | 2 | 2 | 2 | 2 |
| 6 | LEFT SHELL WITH "C" MARKING CONNECTOR SIDE | PA6 GF30 | 1 | 1 | 1 | 1 | 1 | 1 | 1 | 1 | 1 | 1 | 1 | 1 |
| 7 | LEFT SHELL WITH "C" MARKING PLUG SIDE | PA6 GF30 | 1 | 1 | 1 | 1 | 1 | 1 | 1 | 1 | 1 | 1 | 1 | 1 |
| 8 | CABLE RETAINER | PA6 GF30 | 2XCABLE RETAINER 3G6 | | | | | | | | | | | |
| 9 | POWER FEMALE TERMINAL | COPPER ALLOY Ag PLATING | 3X6mm² | | | | | | | | | | | |
| 10 | POWER MALE TERMINAL WITHOUT CAP | COPPER ALLOY Ag PLATING | 1X6mm² | | | | | | | | | | | |
| 11 | POWER MALE TERMINAL WITH CAP | COPPER ALLOY Ag PLATING | 2X6mm² | | | | | | | | | | | |
| 12 | MALE TERMINAL CP | COPPER ALLOY Ag PLATING | 1 | 1 | 1 | 1 | 1 | 1 | 1 | 1 | 1 | 1 | 1 | 1 |
| 13 | MALE TERMINAL PP | COPPER ALLOY Ag PLATING | 1 | 1 | 1 | 1 | 1 | 1 | 1 | 1 | 1 | 1 | 1 | 1 |
| 14 | CP AND PP FEMALE TERMINALS | COPPER ALLOY Ag PLATING | 2 | 2 | 2 | 2 | 2 | 2 | 2 | 2 | 2 | 2 | 2 | 2 |
| 15 | BARBS STEEL | STAINLESS STEEL | 16 | 16 | 16 | 16 | 16 | 16 | 16 | 16 | 16 | 16 | 16 | 16 |
| 16 | SHRINK TUBE FOR SIGNAL CRIMPING | - | 2 | 2 | 2 | 2 | 2 | 2 | 2 | 2 | 2 | 2 | 2 | 2 |
| 17 | SHRINK TUBE FOR POWER CRIMPING | - | 3 | 3 | 3 | 3 | 3 | 3 | 3 | 3 | 3 | 3 | 3 | 3 |
| 18 | TUBE FOR POWER PE | PA6 GF30 | 1 | 1 | 1 | 1 | 1 | 1 | 1 | 1 | 1 | 1 | 1 | 1 |
| 19 | SWS SUB ASSEMBLY TUBE | - | 2X6mm² | | | | | | | | | | | |
| 20 | SWS SUB ASSEMBLY TUBE | - | 2X0.5mm² | | | | | | | | | | | |
| 21 | SWS SUB ASSEMBLY TUBE | - | 3X6mm² | | | | | | | | | | | |
| 22 | SWS SUB ASSEMBLY TUBE | - | 2X0.5mm² | | | | | | | | | | | |
| 23 | FEMALE RESISTOR SUB ASSEMBLY | - | 1X220 Ohm | | | | | | | | | | | |
| 24 | MALE RESISTOR SUB ASSEMBLY | - | 1X220 Ohm | | | | | | | | | | | |
| 25 | SPLICE | CuZn30 | 1X6mm² | | | | | | | | | | | |
| 26 | SHRINK TUBE | - | 1 | 1 | 1 | 1 | 1 | 1 | 1 | 1 | 1 | 1 | 1 | 1 |
| 27 | CABLE ( VISIBLE LENGTH ) | Pu(JACKET) | 3.50 | 4.00 | 4.50 | 5.00 | 5.50 | 6.00 | 6.50 | 7.00 | 7.50 | 8.00 | 8.50 | 9.00 |
| 28 | SECURITY LABEL | NA | 2 | 2 | 2 | 2 | 2 | 2 | 2 | 2 | 2 | 2 | 2 | 2 |
| 29 | SAFETY INSTRUCTION CARD | NA | 1 | 1 | 1 | 1 | 1 | 1 | 1 | 1 | 1 | 1 | 1 | 1 |

| | | | MONO PHASES 20A | | | | | | | | | | | |
|---|---|---|---|---|---|---|---|---|---|---|---|---|---|---|
| | | | 35741704 | 35741706 | 35741708 | 35741710 | 35741712 | 35741714 | 35741716 | 35741719 | 35741721 | 35741723 | 35741725 | 35741727 |
| POS | DESCRIPTION | MATERIAL | QTY | QTY | QTY | QTY | QTY | QTY | QTY | QTY | QTY | QTY | QTY | QTY |
| 1 | FEMALE HOUSING | PA6 GF30 | 1X FEMALE HOUSING 5 WAY | | | | | | | | | | | |
| 2 | MALE HOUSING | PA6 GF30 | 1X MALE HOUSING 5 WAY | | | | | | | | | | | |
| 3 | TPA UPPER | PBT GF30 | 2 | 2 | 2 | 2 | 2 | 2 | 2 | 2 | 2 | 2 | 2 | 2 |
| 4 | TPA LOWER | PBT GF30 | 2 | 2 | 2 | 2 | 2 | 2 | 2 | 2 | 2 | 2 | 2 | 2 |
| 5 | RIGHT SHELL | PA6 GF30 | 2 | 2 | 2 | 2 | 2 | 2 | 2 | 2 | 2 | 2 | 2 | 2 |
| 6 | LEFT SHELL WITH "C" MARKING CONNECTOR SIDE | PA6 GF30 | 1 | 1 | 1 | 1 | 1 | 1 | 1 | 1 | 1 | 1 | 1 | 1 |
| 7 | LEFT SHELL WITH "C" MARKING PLUG SIDE | PA6 GF30 | 1 | 1 | 1 | 1 | 1 | 1 | 1 | 1 | 1 | 1 | 1 | 1 |
| 8 | CABLE RETAINER | PA6 GF30 | 2XCABLE RETAINER 3G2.5 | | | | | | | | | | | |
| 9 | POWER FEMALE TERMINAL | COPPER ALLOY Ag PLATING | 3X2.5mm² | | | | | | | | | | | |
| 10 | POWER MALE TERMINAL WITHOUT CAP | COPPER ALLOY Ag PLATING | 1X2.5mm² | | | | | | | | | | | |
| 11 | POWER MALE TERMINAL WITH CAP | COPPER ALLOY Ag PLATING | 2X2.5mm² | | | | | | | | | | | |
| 12 | MALE TERMINAL CP | COPPER ALLOY Ag PLATING | 1 | 1 | 1 | 1 | 1 | 1 | 1 | 1 | 1 | 1 | 1 | 1 |
| 13 | MALE TERMINAL PP | COPPER ALLOY Ag PLATING | 1 | 1 | 1 | 1 | 1 | 1 | 1 | 1 | 1 | 1 | 1 | 1 |
| 14 | CP AND PP FEMALE TERMINALS | COPPER ALLOY Ag PLATING | 2 | 2 | 2 | 2 | 2 | 2 | 2 | 2 | 2 | 2 | 2 | 2 |
| 15 | BARBS STEEL | STAINLESS STEEL | 16 | 16 | 16 | 16 | 16 | 16 | 16 | 16 | 16 | 16 | 16 | 16 |
| 16 | SHRINK TUBE FOR SIGNAL CRIMPING | - | 2 | 2 | 2 | 2 | 2 | 2 | 2 | 2 | 2 | 2 | 2 | 2 |
| 17 | SHRINK TUBE FOR POWER CRIMPING | - | 3 | 3 | 3 | 3 | 3 | 3 | 3 | 3 | 3 | 3 | 3 | 3 |
| 18 | TUBE FOR POWER PE | PA6 GF30 | 1 | 1 | 1 | 1 | 1 | 1 | 1 | 1 | 1 | 1 | 1 | 1 |
| 19 | SWS SUB ASSEMBLY TUBE | - | 2X2.5mm² | | | | | | | | | | | |
| 20 | SWS SUB ASSEMBLY TUBE | - | 2X0.5mm² | | | | | | | | | | | |
| 21 | SWS SUB ASSEMBLY TUBE | - | 3X2.5mm² | | | | | | | | | | | |
| 22 | SWS SUB ASSEMBLY TUBE | - | 2X0.5mm² | | | | | | | | | | | |
| 23 | FEMALE RESISTOR SUB ASSEMBLY | - | 1X680 Ohm | | | | | | | | | | | |
| 24 | MALE RESISTOR SUB ASSEMBLY | - | 1X680 Ohm | | | | | | | | | | | |
| 25 | SPLICE | CuZn30 | 1X2.5mm² | | | | | | | | | | | |
| 26 | SHRINK TUBE | - | 1 | 1 | 1 | 1 | 1 | 1 | 1 | 1 | 1 | 1 | 1 | 1 |
| 27 | CABLE ( VISIBLE LENGTH ) | Pu(JACKET) | 3.50 | 4.00 | 4.50 | 5.00 | 5.50 | 6.00 | 6.50 | 7.00 | 7.50 | 8.00 | 8.50 | 9.00 |
| 28 | SECURITY LABEL | NA | 2 | 2 | 2 | 2 | 2 | 2 | 2 | 2 | 2 | 2 | 2 | 2 |
| 29 | SAFETY INSTRUCTION CARD | NA | 1 | 1 | 1 | 1 | 1 | 1 | 1 | 1 | 1 | 1 | 1 | 1 |

| | | | MONO PHASES 32A - WITH PROTECTIVE CAP | | | | | | | | | | | |
|---|---|---|---|---|---|---|---|---|---|---|---|---|---|---|
| POS | DESCRIPTION | MATERIAL | 35741679 | 35741680 | 35741681 | 35741685 | 35741687 | 35741688 | 35741689 | 35741690 | 35741691 | 35741692 | 35741693 | 35741694 |
| | JUMPER | | 1 | 1 | 1 | 1 | 1 | 1 | 1 | 1 | 1 | 1 | 1 | 1 |
| 30 | FEMALE PROTECTIVE CAP | TPS-SEBS | 1 | 1 | 1 | 1 | 1 | 1 | 1 | 1 | 1 | 1 | 1 | 1 |
| 31 | MALE PROTECTIVE CAP | TPS-SEBS | 1 | 1 | 1 | 1 | 1 | 1 | 1 | 1 | 1 | 1 | 1 | 1 |

| | | | MONO PHASES 20A - WITH PROTECTIVE CAP | | | | | | | | | | | |
|---|---|---|---|---|---|---|---|---|---|---|---|---|---|---|
| POS | DESCRIPTION | MATERIAL | 35741711 | 35741713 | 35741715 | 35741717 | 35741718 | 35741720 | 35741722 | 35741724 | 35741726 | 35741728 | 35741729 | 35741730 |
| | JUMPER | | 1 | 1 | 1 | 1 | 1 | 1 | 1 | 1 | 1 | 1 | 1 | 1 |
| 30 | FEMALE PROTECTIVE CAP | TPS-SEBS | 1 | 1 | 1 | 1 | 1 | 1 | 1 | 1 | 1 | 1 | 1 | 1 |
| 31 | MALE PROTECTIVE CAP | TPS-SEBS | 1 | 1 | 1 | 1 | 1 | 1 | 1 | 1 | 1 | 1 | 1 | 1 |

| | | | MONO PHASES 32A - WITH PROTECTIVE CAP AND SOFT BAG | | | | | | | | | | | |
|---|---|---|---|---|---|---|---|---|---|---|---|---|---|---|
| POS | DESCRIPTION | MATERIAL | 35742090 | 35742091 | 35742092 | 35742093 | 35742095 | 35742096 | 35742097 | 35742098 | 35742099 | 35742100 | 35742101 | 35742102 |
| | JUMPER | | 1 | 1 | 1 | 1 | 1 | 1 | 1 | 1 | 1 | 1 | 1 | 1 |
| 30 | FEMALE PROTECTIVE CAP | TPS-SEBS | 1 | 1 | 1 | 1 | 1 | 1 | 1 | 1 | 1 | 1 | 1 | 1 |
| 31 | MALE PROTECTIVE CAP | TPS-SEBS | 1 | 1 | 1 | 1 | 1 | 1 | 1 | 1 | 1 | 1 | 1 | 1 |
| 32 | SOFT BAG | | 1 | 1 | 1 | 1 | 1 | 1 | 1 | 1 | 1 | 1 | 1 | 1 |

| | | | MONO PHASES 20A - WITH PROTECTIVE CAP AND SOFT BAG | | | | | | | | | | | |
|---|---|---|---|---|---|---|---|---|---|---|---|---|---|---|
| POS | DESCRIPTION | MATERIAL | 35742200 | 35742202 | 35742395 | 35742396 | 35742397 | 35742398 | 35742399 | 35742400 | 35742401 | 35742402 | 35742403 | 35742405 |
| | JUMPER | | 1 | 1 | 1 | 1 | 1 | 1 | 1 | 1 | 1 | 1 | 1 | 1 |
| 30 | FEMALE PROTECTIVE CAP | TPS-SEBS | 1 | 1 | 1 | 1 | 1 | 1 | 1 | 1 | 1 | 1 | 1 | 1 |
| 31 | MALE PROTECTIVE CAP | TPS-SEBS | 1 | 1 | 1 | 1 | 1 | 1 | 1 | 1 | 1 | 1 | 1 | 1 |
| 32 | SOFT BAG | | 1 | 1 | 1 | 1 | 1 | 1 | 1 | 1 | 1 | 1 | 1 | 1 |

| | | | MONO PHASES 32A - WITH SOFT BAG | | | | | | | | | | | |
|---|---|---|---|---|---|---|---|---|---|---|---|---|---|---|
| POS | DESCRIPTION | MATERIAL | 35742133 | 35742134 | 35742135 | 35742137 | 35742139 | 35742142 | 35742145 | 35742148 | 35742152 | 35742154 | 35742156 | 35742158 |
| | JUMPER | | 1 | 1 | 1 | 1 | 1 | 1 | 1 | 1 | 1 | 1 | 1 | 1 |
| 32 | SOFT BAG | | 1 | 1 | 1 | 1 | 1 | 1 | 1 | 1 | 1 | 1 | 1 | 1 |

| | | | MONO PHASES 20A - WITH SOFT BAG | | | | | | | | | | | |
|---|---|---|---|---|---|---|---|---|---|---|---|---|---|---|
| POS | DESCRIPTION | MATERIAL | 35742180 | 35742181 | 35742182 | 35742183 | 35742184 | 35742186 | 35742195 | 35742196 | 35742197 | 35742198 | 35742199 | 35742201 |
| | JUMPER | | 1 | 1 | 1 | 1 | 1 | 1 | 1 | 1 | 1 | 1 | 1 | 1 |
| 32 | SOFT BAG | | 1 | 1 | 1 | 1 | 1 | 1 | 1 | 1 | 1 | 1 | 1 | 1 |

CONNECTOR VEHICLE SIDE TYPE II

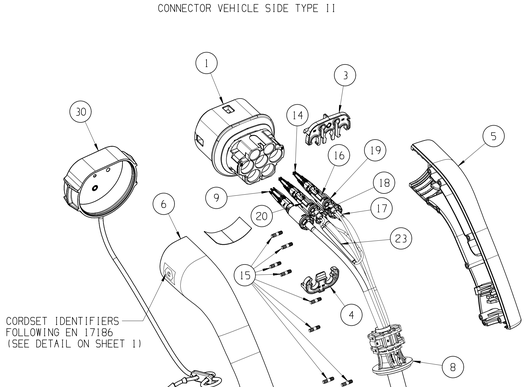


PLUG WALL SIDE TYPE II

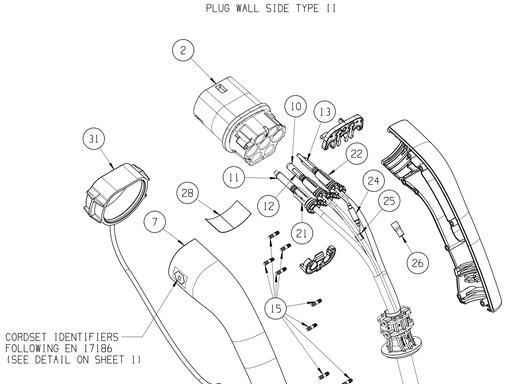


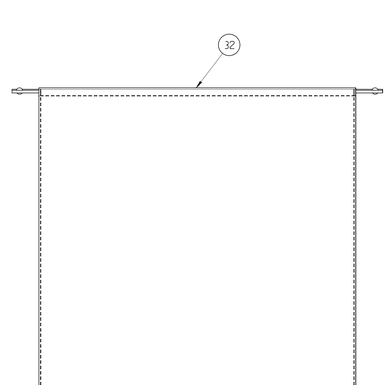


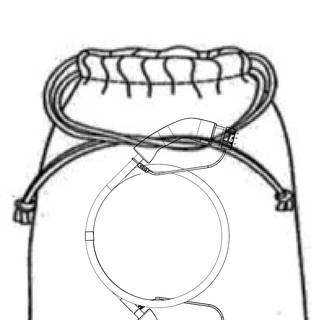

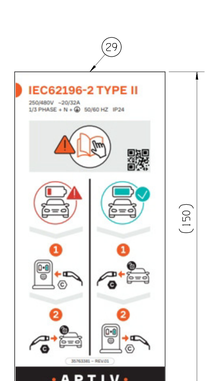


| DMO STATUS | | | | | ZONE | REVISION HISTORY | AUTH | DR | APVD 1 | APVD 2 |
|---|---|---|---|---|---|---|---|---|---|---|
| DATE | STG | REV | N/P | CHG | | | | | | |
| 27JN23 | R | 01 | - | - | - | INITIAL RELEASE | | V.RAN | R.ASH | R.LEI |

A LINE DRAWN THROUGH A PART NUMBER INDICATES THAT PHYSICAL PARTS ARE NOT AVAILABLE FOR ORDERING.

PART NUMBERS THAT DO NOT HAVE A LINE PRESENT INDICATE THAT PHYSICAL PARTS ARE AVAILABLE FOR ORDERING.

CONTACT APTIV SALES TO ASSURE AVAILABILITY OF PARTS.

R 0.1 MAX
R 0.2 MAX
SHARP CORNER TOLERANCE

| | DIMENSIONAL RANGE (MM) | | | | | | | | | |
|---|---|---|---|---|---|---|---|---|---|---|
| DIM TO CHECK | FROM | > 0 | > 20 | > 30 | > 70 | >100 | >150 | >200 | >250 | >300 |
| DIM FOR HELP | TO | 20 | 30 | 70 | 100 | 150 | 200 | 250 | 300 | 400 |
| | TOLERANCE UNLESS OTHERWISE SPECIFIED CHART E1 | | | | | | | | | |
| THEORETIC DIM | | ±0.15 | ±0.2 | ±0.3 | ±0.4 | ±0.5 | ±0.6 | ±0.8 | ±1 | ±1.2 |
| | ANGULAR TOLERANCE ±2° | | | | | | | | | |

DMO TYP
PART DRAWING

WEIGHT (GR): ---
VOLUME (CM³): ---
ROUTING

DISTR CODE: D

UNLESS OTHERWISE SPECIFIED

GENERAL TOLERANCES ACCORDING TO: SEE TABLE

GD&T ACCORDING TO: ISO 1101

REFERENCE

FIRST ANGLE PROJECTION

DO NOT SCALE

USE MATH DATA

NX


•APTIV•

CONNECTION SYSTEMS
Warwick, India

COPYRIGHT 2023 APTIV. ALL RIGHTS RESERVED.

THIS DRAWING IS THE PROPERTY OF APTIV AND CONTAINS APTIV CONFIDENTIAL INFORMATION. THE REPRODUCTION, DISTRIBUTION AND UTILIZATION OF THIS DOCUMENT OR ITS RELATED CAD MATH DATA, AS WELL AS COMMUNICATION OF ANY CONTENT TO OTHERS, WITHOUT EXPRESS AUTHORIZATION, IS PROHIBITED.

CE PLAN EST LE PROPRIETE DE APTIV ET CONTIENT DES INFORMATIONS APTIV CONFIDENTIELLES. LA REPRODUCTION, LA DISTRIBUTION ET L'UTILISATION DE CE DOCUMENT OU DE SES CONNÉES MATHÉMATIQUES CAD, AINSI QUE LA COMMUNICATION DE TOUT CONTENU À AUTRUI, SANS AUTORISATION EXPRESSE EST INTERDITE.


| | | DATE |
|---|---|---|
| DR | V.RANGANADH | 02JA23 |
| APVD1 | R.ASHOK | 02JA23 |
| APVD2 | R.LEININGER | 27JN23 |
| APVD3 | | |
| APVD4 | | |
| APVD5 | | |

SUBSTANCES OF CONCERN AND RECYCLED CONTENT PER APTIV 1094900
MATIERES PROSCRITES ET CONTENU RECYCLABLE SELON APTIV 1094900

MATERIAL: SEE TABLE

DRAWING NAME: JUMPER T2-T2 FAST CHARGE CONNECTOR GENERIC

DRAWING NUMBER: 35742803

| SIZE | SCALE | FRAME NO | SHEET NO | STG | REV | N/P |
|---|---|---|---|---|---|---|
| A0 | 1:2 | 1 OF 1 | 3 OF 4 | R | 01 | - |

User: k_r294
Model: 35742803.CATPart
Date: 05-Jul-23 Time: 20:00:09

| DWG STATUS | | | | | ZONE | REVISION HISTORY | AUTH | DR | APVD 1 | APVD 2 |
|---|---|---|---|---|---|---|---|---|---|---|
| DATE | STG | REV | N/P | CHG | | | | | | |
| 27JN23 | R | 01 | - | - | - | INITIAL RELEASE | | V.RAN | R.ASH | R.LEI |

## FEMALE PROTECTIVE CAP DIMENSIONS

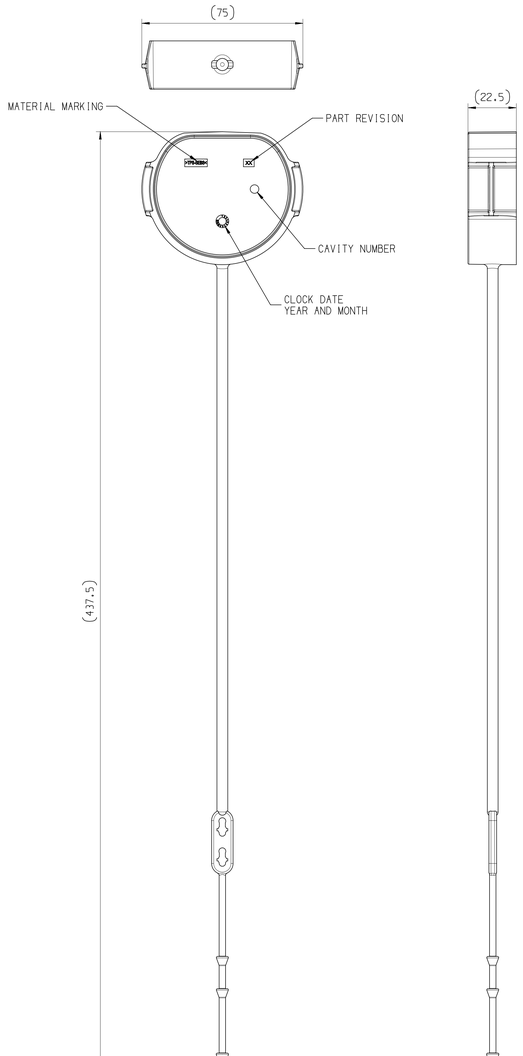


## MALE PROTECTIVE CAP DIMENSIONS

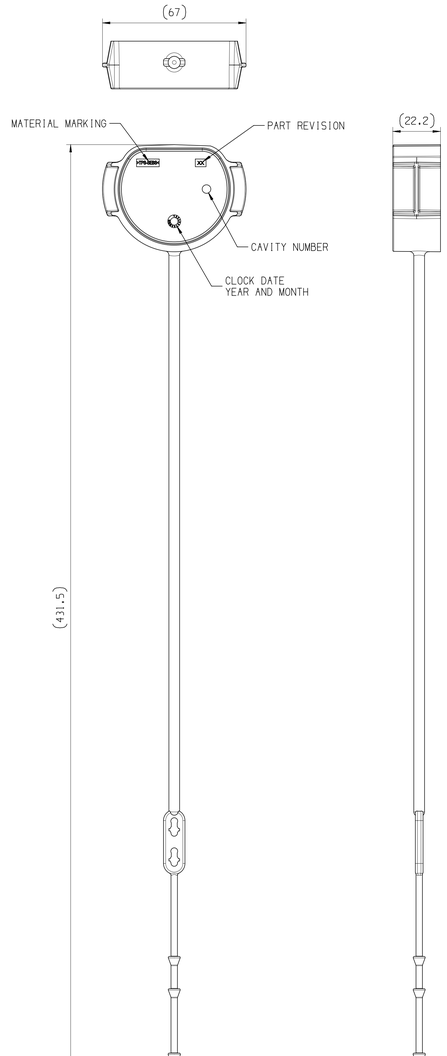


## SOFTBAG DIMENSIONS

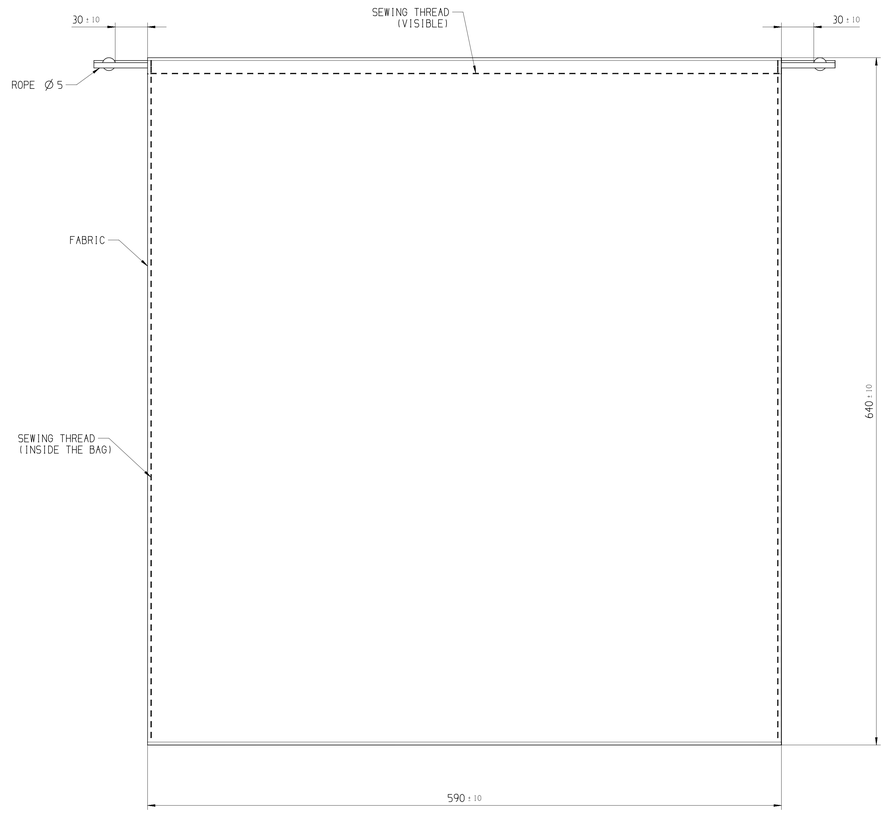


## LABEL DEFINITION

### CONNECTOR IDENTITY LABEL

| PRODUCT | PROTECTIVE CAP | MODEL TYPE | LABEL FORMAT |
|---|---|---|---|
| THREE PHASE 32A | NO | T2-V-3-32-450-EU-040-AR | APTIV IP24 XXXXXXXX 480V ~ 32A 3P+N+⏚ 50/60 Hz; XX-X-X-XX-XXX-XX-XXX-XX; PPT2JCYYMMDDCCCXZZZZZ Made in Morocco |
| | YES | T2-V-3-32-450-EU-040-AP | |
| THREE PHASE 20A | NO | T2-V-3-20-450-EU-042-AR | APTIV IP24 XXXXXXXX 480V ~ 20A 3P+N+⏚ 50/60 Hz; XX-X-X-XX-XXX-XX-XXX-XX; PPT2JCYYMMDDCCCXZZZZZ Made in Morocco |
| | YES | T2-V-3-20-450-EU-042-AP | |
| MONO PHASE 32A | NO | T2-V-1-32-250-EU-041-AR | APTIV IP24 XXXXXXXX 250V ~ 32A 1P+N+⏚ 50/60 Hz; XX-X-X-XX-XXX-XX-XXX-XX; PPT2JCYYMMDDCCCXZZZZZ Made in Morocco |
| | YES | T2-V-1-32-250-EU-041-AP | |
| MONO PHASE 20A | NO | T2-V-1-20-250-EU-043-AR | APTIV IP24 XXXXXXXX 250V ~ 20A 1P+N+⏚ 50/60 Hz; XX-X-X-XX-XXX-XX-XXX-XX; PPT2JCYYMMDDCCCXZZZZZ Made in Morocco |
| | YES | T2-V-1-20-250-EU-043-AP | |

### PLUG IDENTITY LABEL

| PRODUCT | PROTECTIVE CAP | MODEL TYPE |
|---|---|---|
| THREE PHASE 32A | NO | T2-I-3-32-450-EU-040-AR |
| | YES | T2-I-3-32-450-EU-040-AP |
| THREE PHASE 20A | NO | T2-I-3-20-450-EU-042-AR |
| | YES | T2-I-3-20-450-EU-042-AP |
| MONO PHASE 32A | NO | T2-I-1-32-250-EU-041-AR |
| | YES | T2-I-1-32-250-EU-041-AP |
| MONO PHASE 20A | NO | T2-I-1-20-250-EU-043-AR |
| | YES | T2-I-1-20-250-EU-043-AP |

A LINE DRAWN THROUGH A PART NUMBER INDICATES THAT PHYSICAL PARTS ARE NOT AVAILABLE FOR ORDERING.

PART NUMBERS THAT DO NOT HAVE A-LINE PRESENT INDICATE THAT PHYSICAL PARTS ARE AVAILABLE FOR ORDERING.

CONTACT APTIV SALES TO ASSURE AVAILABILITY OF PARTS.

R 0.1 MAX
R 0.2 MAX
SHARP CORNER TOLERANCE

DIM TO CHECK
( ) DIM FOR HELP
THEORETIC DIM

| DIMENSIONAL RANGE (MM) | | | | | | | | | | | CHART E1 |
|---|---|---|---|---|---|---|---|---|---|---|---|
| FROM TO | > 0 20 | > 20 30 | > 30 70 | > 70 100 | >100 150 | >150 200 | >200 250 | >250 300 | >300 400 | | |
| TOLERANCE UNLESS OTHERWISE SPECIFIED | | | | | | | | | | | |
| | ±0.15 | ±0.2 | ±0.3 | ±0.4 | ±0.5 | ±0.6 | ±0.8 | ±1 | ±1.2 | | |
| ANGULAR TOLERANCE ±2° | | | | | | | | | | | |

DWG TYP
PART DRAWING

WEIGHT (GR)
- - - -
VOLUME (CM³)
- - - -
ROUTING

DISTR CODE
D

UNLESS OTHERWISE SPECIFIED

GENERAL TOLERANCES ACCORDING TO: SEE TABLE

GD&T ACCORDING TO: ISO 1101

REFERENCE

FIRST ANGLE PROJECTION

DO NOT SCALE

USE MATH DATA

NX

APTIV
CONNECTION SYSTEMS
Manesar, India
COPYRIGHT 2023 APTIV. ALL RIGHTS RESERVED.
THIS DRAWING IS THE PROPERTY OF APTIV AND CONTAINS APTIV CONFIDENTIAL INFORMATION. THE REPRODUCTION, DISTRIBUTION AND UTILIZATION OF THIS DOCUMENT OR ITS RELATED CAD MATH DATA, AS WELL AS COMMUNICATION OF ANY CONTENT TO OTHERS, WITHOUT EXPRESS AUTHORIZATION, IS PROHIBITED.
LE PLAN EST LE PROPRIETE DE APTIV ET CONTIENT DES INFORMATIONS APTIV CONFIDENTIELLES LA REPRODUCTION, LA DISTRIBUTION ET L'UTILISATION DE CE DOCUMENT OU DE SES DONNÉES MATHÉMATIQUES CAO, AINSI QUE LA COMMUNICATION DE TOUT CONTENU À AUTRUI, SANS AUTORISATION EXPRESSE EST INTERDITE.

| | | DATE |
|---|---|---|
| DR | V.RANGANADH | 02JA23 |
| APVD1 | R.ASHOK | 02JA23 |
| APVD2 | R.LEININGER | 27JN23 |
| APVD3 | | |
| APVD4 | | |
| APVD5 | | |

SUBSTANCES OF CONCERN AND RECYCLED CONTENT PER APTIV 10949001
MATIERES PRISCRITES ET CONTENU RECYCLABLE SELON APTIV 10949001

MATERIAL
SEE TABLE

DRAWING NAME
JUMPER T2-T2 FAST CHARGE CONNECTOR GENERIC

DRAWING NUMBER
35742803

| SIZE | SCALE | FRAME NO | SHEET NO | STG | REV | N/P |
|---|---|---|---|---|---|---|
| A0 | 1:2 | 1 OF 1 | 4 OF 4 | R | 01 | - |

User: X_ZRAJ
Kgs: 35742803_01R01_SPW01
Kgs: 35742803_01R01_Process, Date: 05-Jul-23 Time: 20:15:14

# Mouser Electronics

Authorized Distributor

Click to View Pricing, Inventory, Delivery & Lifecycle Information:

Aptiv:
35741717