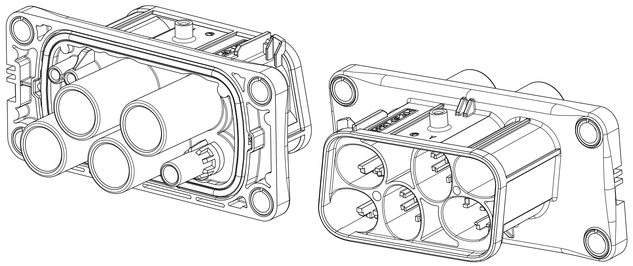

ASSOCIATED PARTS (FOR INFORMATION)

	MVL PART-N°	DELPHI PART-N°	WIRE SECTION	EXTERNAL WIRE DIAMETER	SINGLE WIRE SEAL		
					REFERENCE MVL MVL PART-N°	DELPHI PART-N°	COLOUR
TINNED APEX 950 MALE TERMINAL	F008900	33514386	16mm²	Ø6.3 MINI - 6.9 MAXI	F128900	33503295	YELLOW
			10mm²	Ø5.0 MINI - 5.6 MAXI	F028900	33503294	BLUE
TINNED APEX 2.8 MALE TERMINAL	54001027	15516298	4mm²	Ø3.4 MINI - 3.7 MAXI	C302400	33512175	REDDISH BROWN
GOLD PLATED DCS2 1.5 MALE TERMINAL	60100714	33511802	0.35mm²	Ø1.25 MINI - 1.35 MAXI	60993913	15441379	RED
	60100734	10779703	0.5mm²	Ø1.4 MINI - 1.5 MAXI			
5W APEX950 FEMALE CONNECTOR CODING 1	-	33402139					

NOTES:

1) MVL PRODUCT SPECIFICATIONS ; FE PS 14 005
   - TEMPERATURE CLASS OF THE CONNECTOR : CLASS 3 (-40°C ; +125°C)
   - TEST TEMPERATURE : 125°C
   - VIBRATION CLASS :
     - PRECONDITIONING
     - 3x 16H (COMBINED WITH TEMPERATURE -40°C/+125°C) ; 3.9g
   - SEALING CLASS :
     - 1000mb INITIAL
     - 500mb DURING 30s AFTER ENVIRONMENT TEST
     - JET SPRAY IP69K: VALIDATED ONLY WITH THE PLUG CONNECTOR COVER. (COVER REFERENCE: TO SEE HANDLING MANUAL).
   - MATING FORCE : F < 120N
   - IP2X FINGER PROTECTION CONNECTOR UNMATED
   - IP4X WIRE PROTECTION CONNECTOR MATED
2) PACKAGING : FE PA 10 004
3) HANDLING MANUAL : PU188
4) MASS OF THE PRODUCT : 0.105 kg ±5%
5) THIS DRAWING IS AN EXTRACT OF THE DETAIL DRAWINGS. IN CASE OF CONFLICT, TO REFER TO THEM.
6) MVL DRAWING OF FEMALE CONNECTOR (COUNTERPART): PCC0843590
7) THE PRECONIZED SCREWING TORQUE PARTICIPATE TO A SECURITARY SEALING FEATURE.
8) DIMENSION FOLLOWING NORM ISO10579-NR
   - SCREWING WITH 4 SCREWS, DESCRIBED ON SHEET 2.
   - MOUNTED ON INTERFACE, DESCRIBED ON SHEET 2.
   - SCREWING TORQUE: 8Nm ±10%
9) THE MVL PART REVISION C MARKING CORRESPOND TO THE DELPHI PART REVISION 01

TERMINALS AXIS

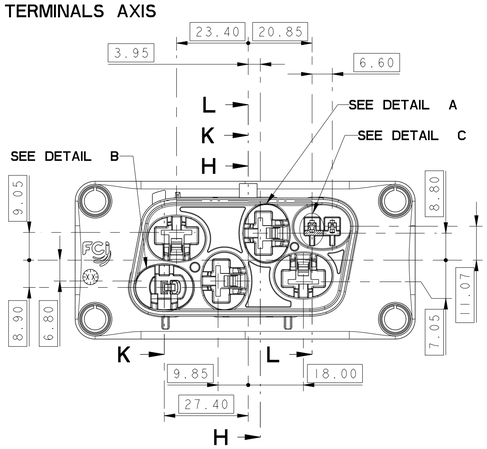

950 APEX CAVITY DETAIL / 4X CAVITIES

DETAIL A SCALE 3:2

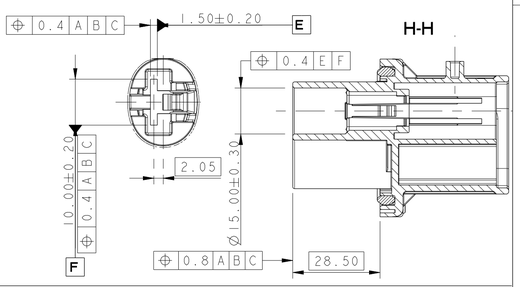

2.8 APEX CAVITY DETAIL / 1X CAVITY

DETAIL B SCALE 3:2

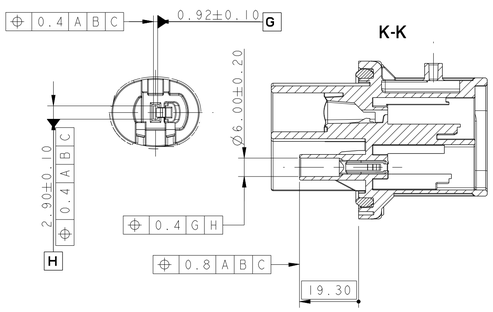

DCS 1.5 CAVITY DETAIL / 2X CAVITIES

DETAIL C
LOCAL SECTION M-M
SCALE 5:2

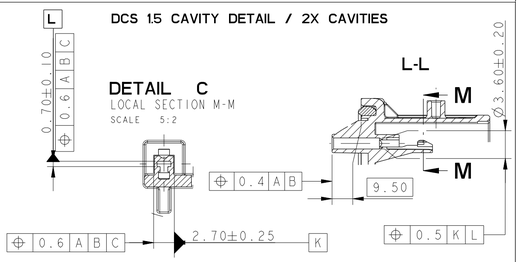

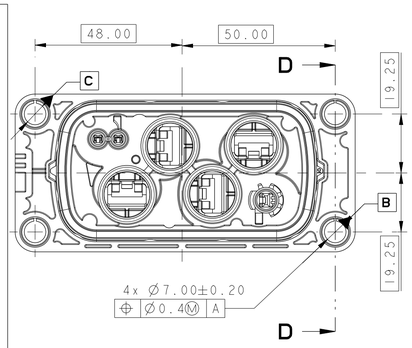

LOCAL SECTION G-G

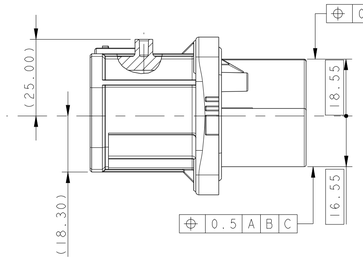

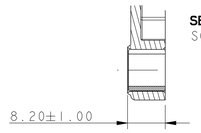

SECTION D-D
SCALE 3:2

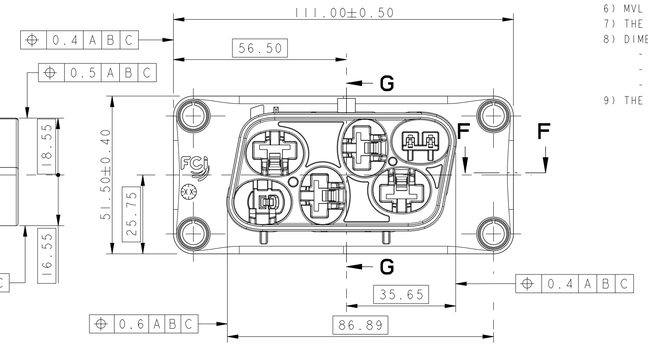

LOCAL SECTION F-F

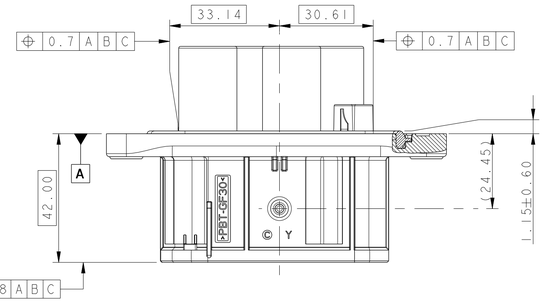

MARKING SCALE 0.6

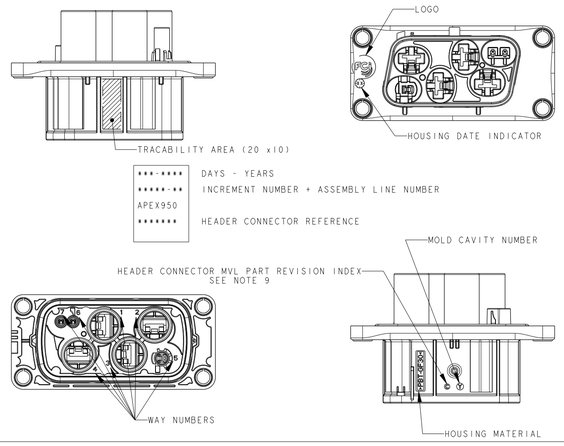

ADMISSIBLE WARPAGE

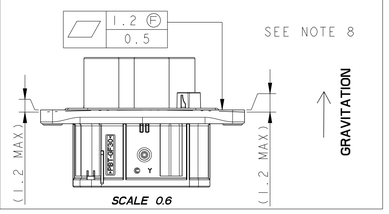

MECHANICAL KEY 1

DELPHI PART NUMBER	33402137 REVISION 01

LOCAL SECTION N-N

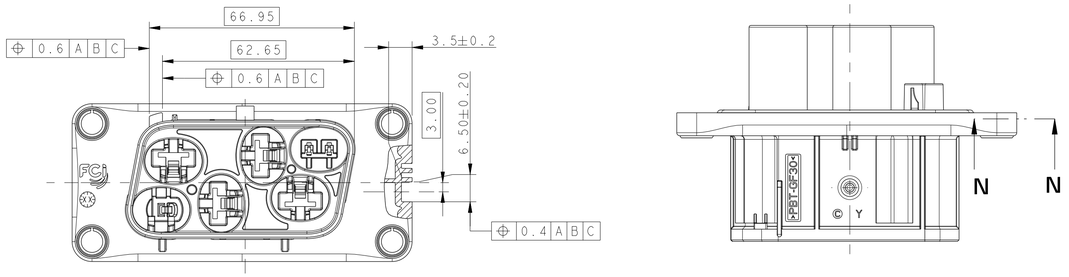

ECN-NO. NUMERO ECN	POSITION POSITION	CHANGE DESCRIPTION MODIFICATION
14-03381	-	-
	-	-
	-	-
	-	-
	-	-
	-	INITIAL ISSUE

PRODUCT SPEC. SPECIF. PRODUIT: SEE NOTE	PACKAGING SPEC. SPECIF. EMBALAGE: SEE NOTE	APPLICATION SPEC. SPECIF. APPLICATION: SEE NOTE	COPYRIGHT DELPHI CORPORATION AND/OR ITS AFFILIATES. ALL RIGHTS RESERVED. REVISED THIS DRAWING IS THE PROPERTY OF DELPHI CORPORATION AND CONTAINS DELPHI CONFIDENTIAL INFORMATION. THE REPRODUCTION, DISTRIBUTION AND UTILIZATION OF THIS DOCUMENT OR ITS RELATED CAD MATA DATA, AS WELL AS COMMUNICATION OF ANY CONTENT TO OTHERS, WITHOUT EXPRESS AUTHORIZATION, IS PROHIBITED. CE PLAN EST LA PROPRIETE DE DELPHI CORPORATION ET CONTIENT DES INFORMATIONS DELPHI CONFIDENTIELLES. LA REPRODUCTION, LA DISTRIBUTION ET L'UTILISATION DE CE DOCUMENT OU DE SES DONNEES MATOMATIQUES CAD, AINSI QUE LA COMMUNICATION DE TOUT CONTENU A AUTRUI, SANS AUTORISATION EXPRESSE, EST INTERDITE.

TOLERANCES TOLERANCES: ±0.2 ±2°	MATERIAL : MATIERE : SEE BOM	SURFACE FINISH ETAT DE SURFACE: -	DELPHI DELPHI PACKARD ELECTRICAL/ELECTRONIC ARCHITECTURE EPERNON, FRANCE
COUNTERPART N° CONTRE-PARTIE N°: -	COLOUR COULEUR : SEE BOM	-	CAD SYSTEM: pro / eng.
DO NOT MEASURE DRAWING NE PAS PRENDRE DE COTES	TOOL NO. Outil N°: -	ECO Loc. Code CODE B.E.: FE	ISO PROJECTION PROJECTION ISO — DIMENSION IN MILLIMETERS DIMENSIONS EN MILLIMETRES — DWG SIZE FORMAT: A1

	DATE DATE	NAME NOM	TITLE DESIGNATION	DRAWING NUMBER REF. PLAN	REV. IND.
CREATED BY CREE PAR	2014/03/11	Gilles SCHMITT	5W APEX950 HEADER	PCC0843589	A
MODIFIED BY MODIF. PAR	2014/04/09	Gilles SCHMITT	PROJECT PROJET: 5W APEX950 POWER CONNECTOR	STATE ETAT: SERIAL RELEASED	
CHECKED BY VERIF. PAR	2014/04/09	Jean FABRIS			
APPROVED BY APPR. PAR	2014/04/09	Frederic MENEZ	ECN NO. NUMERO ECN: EU-090590 — EAN NO. NUMERO CAT.: -	PART NUMBER REF. ARTICLE	REV. IND.
FILE NAME NOM DE FICHIER	PCC0843589		DOCUMENT UNDER PDS CONTROL / NO MODIFICATION ALLOWED OUTSIDE — DOCUMENT GERE SOUS P.D.S. / PAS DE MODIFICATION EN DEHORS	33402137	01

APPROVAL LEVEL NIV. D'APPROBATION: - SHEET FEUILLE: 1 of / sur 2 SCALE ECH.: 1:1

EUR C04 112 F29

FREE SPACE AREA NEEDED TO MATE AND UNMATE THE FEMALE CONNECTOR ON THE HEADER, FOR INFORMATION.

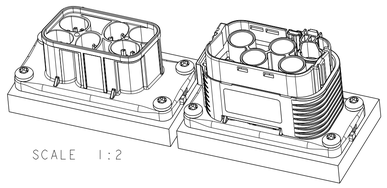

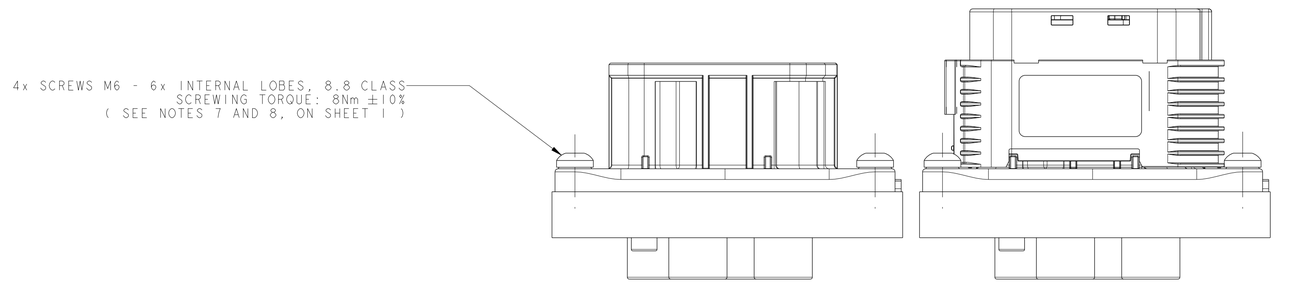

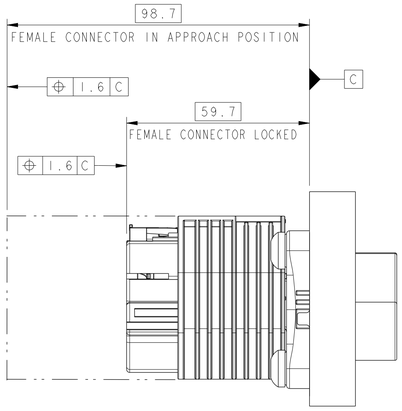

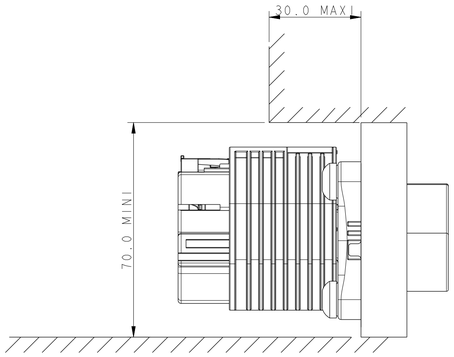

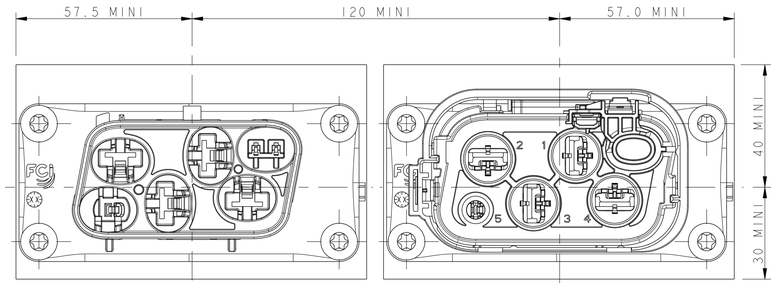

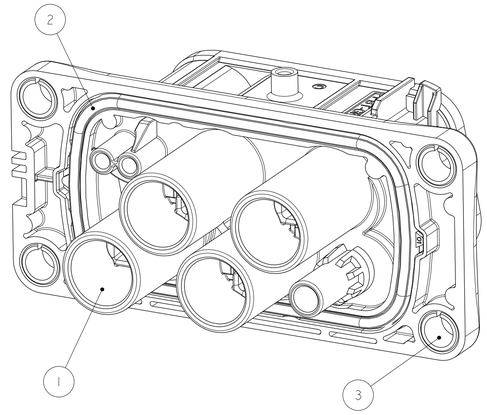

COMPONENTS TABLE CONSTITUTING THE PRODUCT				
ITEM	TITLE	COLOUR	MATERIAL	QUANTITY
1	KEY 1 HOUSING	ORANGE	PBT GF30	1
2	FLAT SEAL	GREY	LSR SILICON	1
3	METALLIC INSERT	-	CARBON STEEL	4

DEFINITION OF THE INTERFACE, TO ASSEMBLE THE HEADER

MATERIAL : ALUMINIUM ALLOY (SALT SPRAY TEST + ELECTRICAL TEST FROM DELPHI PRODUCT SPECIFICATION FE PS 14 005)
PRECONIZED ALUMINIUM ALLOY WITH COPPER RATE LESS THAN 1%

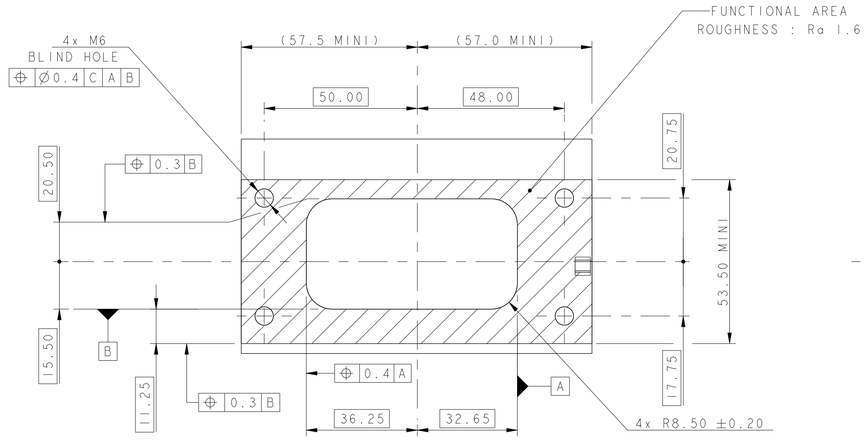

KEY 1

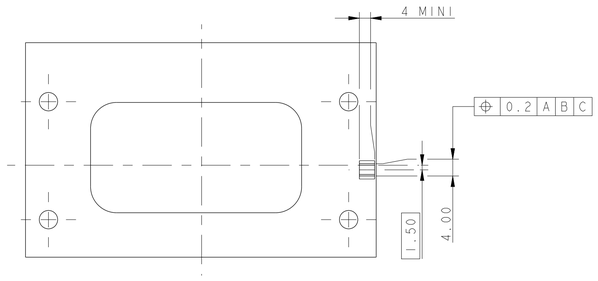

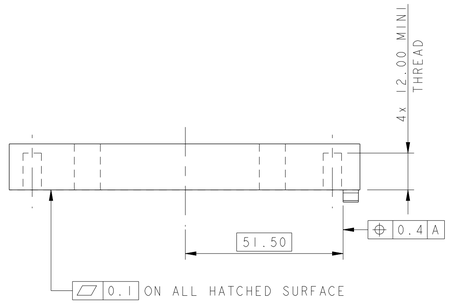

ECN-NO. NUMERO ECN	POSITION POSITION	CHANGE DESCRIPTION MODIFICATION
14-03381	-	-
	-	-
	-	-
	-	-
	-	INITIAL ISSUE

PRODUCT SPEC. SPECIF. PRODUIT: SEE NOTE
PACKAGING SPEC. SPECIF. EMBALLAGE: SEE NOTE
APPLICATION SPEC. SPECIF. APPLICATION: SEE NOTE

COPYRIGHT DELPHI CORPORATION AND/OR ITS AFFILIATES. ALL RIGHTS RESERVED. REVISED
THIS DRAWING IS THE PROPERTY OF DELPHI CORPORATION AND CONTAINS DELPHI CONFIDENTIAL INFORMATION. THE REPRODUCTION, DISTRIBUTION AND UTILIZATION OF THIS DOCUMENT OR ITS RELATED CAD MATIA DATA, AS WELL AS COMMUNICATION OF ANY CONTENT TO OTHERS, WITHOUT EXPRESS AUTHORIZATION, IS PROHIBITED.
CE PLAN EST LA PROPRIETE DE DELPHI CORPORATION ET CONTIENT DES INFORMATIONS DELPHI CONFIDENTIELLES. LA REPRODUCTION, LA DISTRIBUTION ET L'UTILISATION DE CE DOCUMENT OU DE SES DONNEES MATHEMATIQUES CAD, AINSI QUE LA COMMUNICATION DE TOUT CONTENU A AUTRUI, SANS AUTORISATION EXPRESSE, EST INTERDITE.

TOLERANCES TOLERANCES: ±0.2 ±2°
COUNTERPART N° CONTRE-PIECE N°: -
DO NOT MEASURE DRAWING NE PAS PRENDRE DE COTES
MATERIAL : MATIERE : SEE BOM
SURFACE FINISH ETAT DE SURFACE: -
COLOUR : COULEUR : SEE BOM
TOOL NO. OUTIL N°: -
ECO Loc. Code CODE B.E.: FE
TITLE DESIGNATION: 5W APEX950 HEADER
PROJECT PROJET: 5W APEX950 POWER CONNECTOR
ESR NO. NUMERO ESR: EU-090590
CAT. NO. NUMERO CAT.
DOCUMENT UNDER POS CONTROL DOCUMENT GERE SOUS P.O.S.
NO MODIFICATION ALLOWED OUTSIDE PAS DE MODIFICATION EN DEHORS

	DATE DATE	NAME NOM
CREATED BY CREE PAR	2014/03/11	Gilles SCHMITT
MODIFIED BY MODIF. PAR	2014/04/09	Gilles SCHMITT
CHECKED BY VERIF. PAR	2014/04/09	Jean FABRE
APPROVED BY APPR. PAR	2014/04/09	Frederic MENEZ
FILE NAME NOM DE FICHIER	PCC0843589	

DELPHI
DELPHI PACKARD ELECTRICAL/ELECTRONIC ARCHITECTURE
EPERNON, FRANCE

ISO PROJECTION PROJECTION ISO
DIMENSION IN MILLIMETERS DIMENSIONS EN MILLIMETRES
CAD SYSTEM: pro / eng.
DWG SIZE FORMAT: A1
APPROVAL LEVEL NIV. D'APPROBATION: -
SHEET FEUILLE: 2 of 1 sur 2
SCALE ECH.: 1:1

DRAWING NUMBER REF. PLAN: PCC0843589
REV. IND.: A
STATE ETAT: SERIAL RELEASED
PART NUMBER REF. ARTICLE: 33402137
REV. IND.: 01

EUR C04 112 F29

Mouser Electronics

Authorized Distributor

Click to View Pricing, Inventory, Delivery & Lifecycle Information:

Aptiv:
33402137