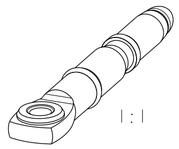

REPERE *ITEM*	QUANTITE *QUANTITY*	DESIGNATION *DESCRIPTION*	MATIERE *MATERIAL*	ETAT SURFACE *SURFACE FINISH*	COULEUR *COLOR*	POIDS (kg ±10%) *WEIGHT (kg ±10%)*
1	1	CORPS *PIN BODY*	CuPb1P (CW113C) - R300	3-9 µm Ag with passivation (D)	--	VOIR TABLEAU DES CONTACTS *SEE TABLE OF CONTACT*
2	1	CAPUCHON *CAP*	PA46-GF30	--	NOIR *BLACK* RAL 9011	0.00022 (D)
3	1	INSERT ECROU *INSERT NUT*	11SMnPb37	ZnNi 5-15µm PERFORMA 280-5	--	0.00183 (D)
4	1	JOINT TORIQUE *O-RING SEAL*	LR40 shore A	--	NOIR *BLACK* RAL 9011	0.00007

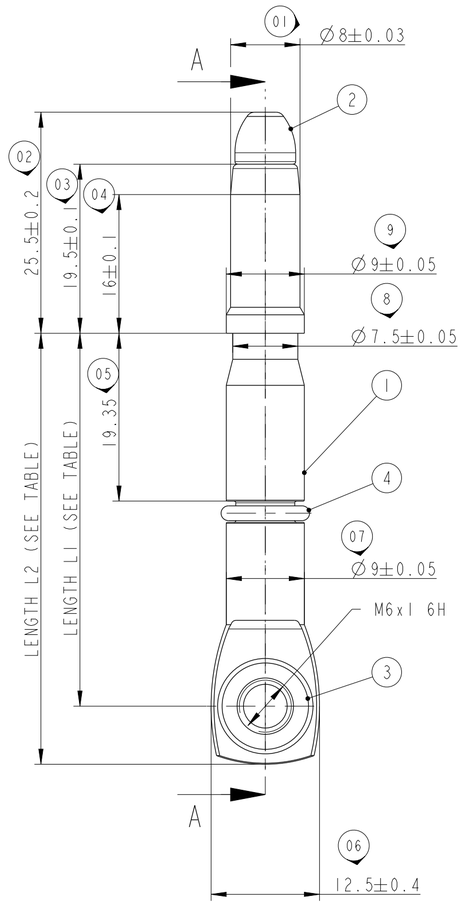

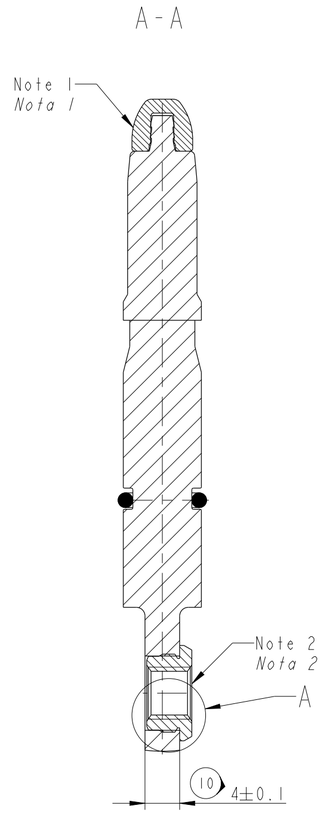

NOTE:
NOTA:

1 - EFFORT D'ARRACHEMENT DU CAPUCHON : F > 60N
RETENTION FORCE OF THE CAP : F > 60N

2 - TENUE DE L'INSERT A L'ARRACHEMENT : F > 100N
RETENTION FORCE OF THE NUT : F > 100N

- TENUE DE L'INSERT AU COUPLE DE SERRAGE : 12Nm MINI
INSERT NUT TORQUE RESISTANCE : 12Nm MINI

- RAYON NON COTE: R=0.2
UNSPECIFIED RADIUS: R=0.2

- BAVURE HAUTEUR < 0.03
BURR HEIGHT < 0.03

3 - (n) BULLE METROLOGIQUE
METROLOGICAL MARK

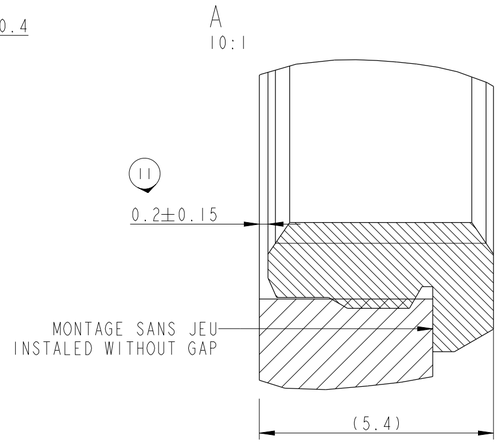

MALE TERMINAL ASSEMBLY VERSIONS

DESIGNATION *TITLE*	REF FCI *FCI P/N*	Ind. *Rev.*	LENGTH L1 ±0.2	LENGTH L2 ±0.3	MASSE *WEIGHT* (kg ±10%)
MALE TERMINAL ASSEMBLY GENERIC STANDARD VERSION	F076600	A	43.0	49.7	0.033
MALE TERMINAL ASSEMBLY GENERIC VERSION 1	F176600	B	65.0	71.7	0.045
MALE TERMINAL ASSEMBLY GENERIC VERSION 2	F276600	B	89.0	95.7	0.058
MALE TERMINAL ASSEMBLY GENERIC VERSION 3	F376600	B	44.5	51.2	0.034 (D)
			(12)	(13)	

-	-	-
	-	UPDATE WEIGHT
	-	MODIFY Ag THICKNESS
	-	ADD VERSION 3

ECN-NO. *NUMERO ECN* | POSITION *POSITION* | CHANGE DESCRIPTION *MODIFICATION*

PRODUCT SPEC. *SPECIF. PRODUIT*: TBD
PACKAGING SPEC. *SPECIF. EMBALLAGE*: TBD
APPLICATION SPEC. *SPECIF. APPLICATION*: -

THIS DRAWING AND ALL OTHER INFORMATION CONTAINED THEREIN IS PROPRIETARY AND THE PROPERTY OF FCI. This drawing may not be copied, reproduced or disclosed to any third party without the expressed written permission of FCI.
© FCI April 1999

CE PLAN ET LES INFORMATIONS CONTENUES DANS CE PLAN SONT PROPRIETAIRES ET LA PROPRIETE DE FCI. Ce plan ne peut être copié, reproduit ou transmis sans l'autorisation expresse et écrite de FCI.
© FCI Avril 1999

TOLERANCES *TOLERANCES*: SEE NOTES
MATERIAL : *MATIERE :* SEE TABLE
SURFACE FINISH *ETAT DE SURFACE* SEE TABLE
COUNTERPART Nr. *CONTRE-PARTIE N°*: -
COLOUR : *COULEUR :* -
DO NOT MEASURE DRAWING *NE PAS PRENDRE DE COTES*
TOOL NO. *OUTIL N°*: -
ECO Loc. Code *CODE B.E.* FE

ISO PROJECTION *PROJECTION ISO* | DIMENSION IN MILLIMETERS *DIMENSIONS EN MILLIMETRES* | CAD SYSTEM pro / eng. | DWG SIZE *FORMAT* A2

	DATE *DATE*	NAME *NOM*
CREATED BY *CREE PAR*	2009/11/02	Peter NUETZEL
MODIFIED BY *MODIF. PAR*	2012/04/20	L DOMERGUE
CHECKED BY *VERIF. PAR*	2012/04/20	Claude CASSES
APPROVED BY *APPR. PAR*	2012/04/23	Patrice CAPPE

TITLE *DESIGNATION*: **MALE TERMINAL**
PROJECT *PROJET*: **RCS 800 GENERIC**
ESR NO. *NUMERO ESR* EU-090806 | CAT. NO. *NUMERO CAT* -
FILE NAME *NOM DE FICHIER* PCC0620707
DOCUMENT UNDER PDS CONTROL *DOCUMENT GERE SOUS P.D.S.*
NO MODIFICATION ALLOWED OUTSIDE *PAS DE MODIFICATION EN DEHORS*

DRAWING NUMBER *REF. PLAN*: **PCC0620707** | REV. *IND.*: **D**
STATE *ETAT*: **SERIAL RELEASED**
PART NUMBER *REF. ARTICLE*: **See Table** | REV. *IND.*: -
APPROVAL LEVEL *NIV. D'APPROBATION*: -
SHEET *FEUILLE* 1 of 1 *sur*
SCALE *ECH.* 2:1

EUR C04 112 F29 PDS

Mouser Electronics

Authorized Distributor

Click to View Pricing, Inventory, Delivery & Lifecycle Information:

Aptiv:
33511747