SYMBOL DEFINITION		
A DIMENSION WITHOUT AN INSPECTION REPORT SYMBOL ( ) DOES NOT REQUIRE INSPECTION. IT MAY BE CONTROLLED ON THE INDIVIDUAL COMPONENT DRAWING.	TOTAL NO OF INSPECTIONS REQUIRED	19
	LAST NO. USED	12

MISSING SYMBOLS

NO MISSING SYMBOL NUMBER

DWG STATUS					ZONE	REVISION HISTORY	AUTH	DR	APVD 1	APVD 2
DATE	STG	REV	N/P	CHG						
18DE17	R	01	-	-		CREATED TAXI DRAWING	438642	HWH	WGJ	TY
05MY21	R	01	AA	-		ADDED CHANGAN PN 35553972	447276	YLX	AM	YLX
08MY21	R	01	AB	-		ADDED CHANGAN PN 35625476	447276	YLX	AM	YLX

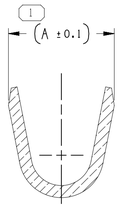

SECTION A - A

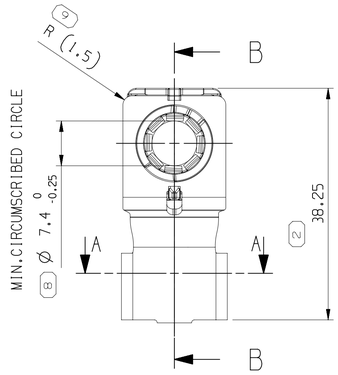

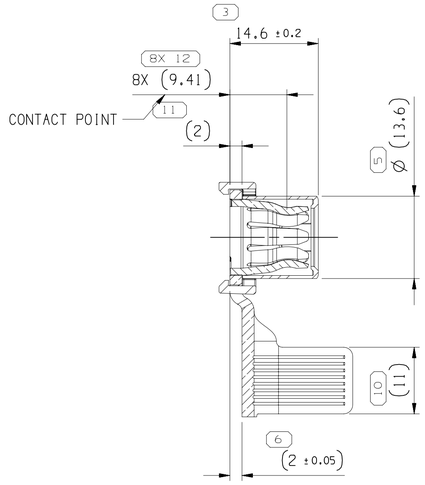

SECTION B - B

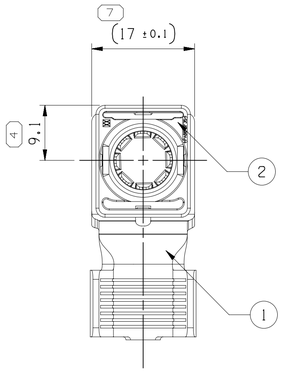

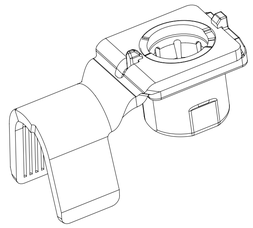

NOTES:

1. UNLESS OTHERWISE SPECIFIED AND/OR INDICATED:

   DIMENSIONS ARE TO FACE OF VIEW SHOWN AND AUTOMATICALLY ROUNDED BY COMPUTER FOR INSPECTION (SEE MATH MODEL FOR PRECISE DIMENSIONS). FOR ALL OTHER DIMENSIONS NOT SHOWN BUT REQUIRED FOR TOOL BUILD, SEE MATH MODEL FOR PRECISE TOOL PATH DATA.

2. PART HAS TO BE DELIVERED DEGREASED.

3. PART MUST BE WATERPROOF PACKING.

4. PART MUST BE FREE OF CRACKS.

5. ONLY RECOMMENDED CABLE ACC. TO LV216-2.
   CABLE SIZE: 16/25/35/50 MM² PER M6371 VALIDATED.
   ALL OTHER CABLE SUPPLIERS / CABLE SIZES MUST BE VALIDATED.

POS	PART NO	REV	DESCRIPTION	QTY	MATERIAL AND COLOR	DIM A	WEIGHT(g)
2	33355984	-	TERMINAL CAP, BLK	1	POLYAMIDE BLEND BLK	-	-
1	33383883	-	TERMINAL SPRING 90 DEGREE ASSY, 16/25mm²	1	-	-	-
D	35625476	01	FEMALE TERMINAL ASSY. 16/25mm²	-	-	13.6	15.181
2	35046068	-	TERMINAL CAP, GRY	1	POLYAMIDE BLEND GRY	-	-
1	33355956	-	TERMINAL SPRING 90 DEGREE ASSY, 35/50mm²	1	-	-	-
C	35553972	01	FEMALE TERMINAL ASSY. 35/50 mm²	-	-	17.48	17.371
2	33355984	-	TERMINAL CAP, BLK	1	POLYAMIDE BLEND BLK	-	-
1	33383883	-	TERMINAL SPRING 90 DEGREE ASSY, 16/25mm²	1	-	-	-
B	35172741	01	FEMALE TERMINAL ASSY. 16/25mm²	-	-	13.6	15.181
2	35046068	-	TERMINAL CAP, GRY	1	POLYAMIDE BLEND GRY	-	-
1	33355956	-	TERMINAL SPRING 90 DEGREE ASSY, 35/50mm²	1	-	-	-
A	35172742	01	FEMALE TERMINAL ASSY. 35/50 mm²	-	-	17.48	17.371

2 PROCESS SENSITIVE DIMENSION

DIMENSIONS ENCLOSED IN ( ) INDICATE REFERENCE DIMENSIONS AND NO TOLERANCE LIMITS ARE ESTABLISHED

DIMENSIONAL RANGE (MM)		CHART D
FROM	0	>12
TO	12	
TOLERANCE UNLESS OTHERWISE SPECIFIED		
±0.1	±0.2	
ANGULAR TOLERANCE ±2°		

A ——— LINE DRAWN THROUGH A PART NUMBER INDICATES THAT PHYSICAL PARTS ARE NOT AVAILABLE FOR ORDERING.

PART NUMBERS THAT DO NOT HAVE A LINE PRESENT INDICATE THAT PHYSICAL PARTS ARE AVAILABLE FOR ORDERING.

CONTACT APTIV SALES TO ASSURE AVAILABILITY OF PARTS.

DWG TYPE: CUSTOMER PART DRAWING

STYLE

VOLUME (CM³): SEE CHART

DISTR CODE: D

UNLESS OTHERWISE SPECIFIED

THIS DOCUMENT IS IN ACCORDANCE WITH ASME Y14.5M-1994 AS AMENDED BY THE GM GLOBAL DIMENSIONING AND TOLERANCING ADDENDUM-2001. SEPARATE PATTERNS OF FEATURES MAY BE GAGED SEPARATELY REGARDLESS OF DATUM REFERENCES.

ALL DIMENSIONS ARE IN MILLIMETERS

REFERENCE

THIRD ANGLE PROJECTION

DO NOT SCALE

USE MATH DATA

NX

•APTIV•

CONNECTION SYSTEMS

Chennai, India

COPYRIGHT 2018 APTIV. ALL RIGHTS RESERVED.

THIS DRAWING IS THE PROPERTY OF APTIV AND CONTAINS APTIV CONFIDENTIAL INFORMATION. THE REPRODUCTION, DISTRIBUTION AND UTILIZATION OF THIS DOCUMENT OR ITS RELATED CAD MATH DATA, AS WELL AS COMMUNICATION OF ANY CONTENT TO OTHERS, WITHOUT EXPRESS AUTHORIZATION, IS PROHIBITED.

		DATE
DR		
APVD1	HUIWEI HUANG	16JA18
APVD2	WEIGUO JIANG	16JA18
APVD3	TIMON YU	16JA18
APVD4		
APVD5		

SUBSTANCES OF CONCERN AND RECYCLED CONTENT PER APTIV 1094900I

MATERIAL: SEE CHART

DRAWING NAME: TAXI ASM TERM SLV/PIN AG SEALED

DRAWING NUMBER: 33383884

SIZE	SCALE	FRAME NO	SHEET NO	STG	REV	N/P
A1	2:1	1 OF 1	1 OF 1	R	01	AB

User: 138604 Date: 28-Nov-21 Time: 23:33:24
Project: 138604-CUS01-S03/01AB
128Key:1128202021(1910,160pdms,nc)

Mouser Electronics

Authorized Distributor

Click to View Pricing, Inventory, Delivery & Lifecycle Information:

Aptiv:
35172742