NOTES	SPECIFICATIONS
1	FEMALE CONNECTOR DRAWING: 35253705-CUS02 INTERFACE DRAWING: 35253704-CDE02
2	USER MANUAL, REF APTIV: PU277
3	APTIV PRODUCT SPECIFICATION: FE PS 19 007

ASSOCIATED PRODUCTS

DESCRIPTION	VISIBLE COLOR CODING	WIRE RANGE	Ø INSULATION MIN	Ø INSULATION MAX	APTIV P/N
FEMALE CONNECTOR	ORANGE	N/A			35254366
SILVER DSQ 1.5 FEMALE TERMINAL	N/A	0.35 - 0.50 MM2	2.3	2.8	15549847
SWS FOR DSQ	RED				15441379
SILVER DSQ 1.5 FEMALE TERMINAL	N/A	0.75 - 1.00 MM2	2.3	2.8	15549848
SWS FOR DSQ	GREY				15441380

DWG STATUS DATE	STG	REV	N/P	CHG	ZONE	REVISION HISTORY	AUTH	DR	APVD 1	APVD 2
09AP20	R	01	-			INITIAL RELEASE		T.PRA	L.MIC	V.MAR

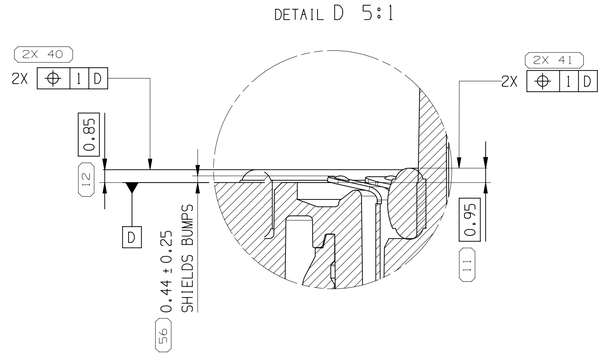

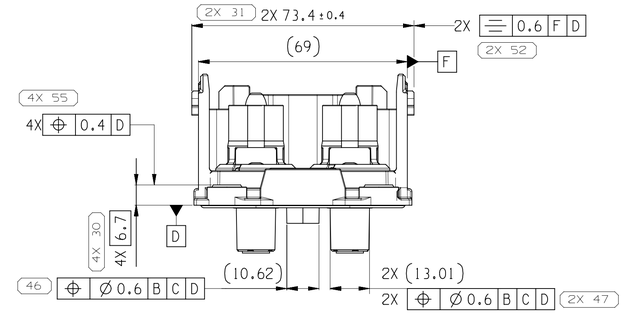

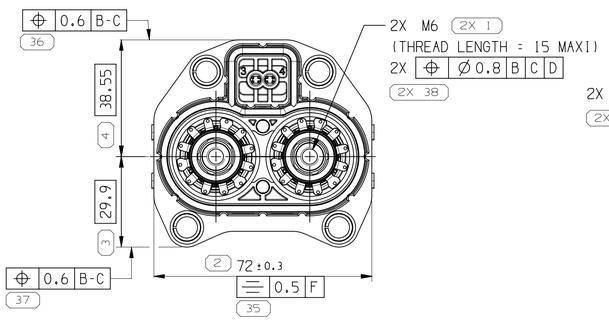

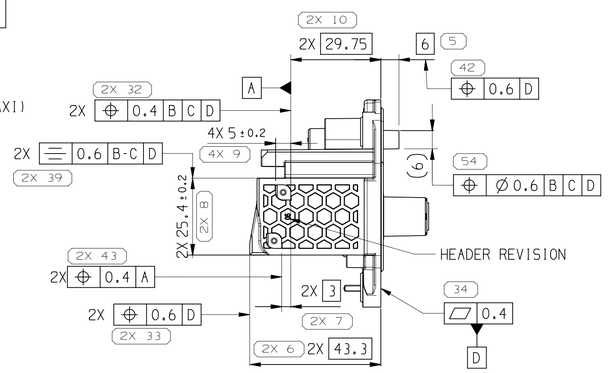

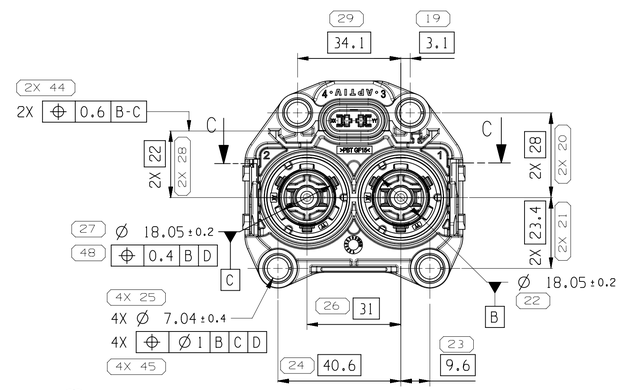

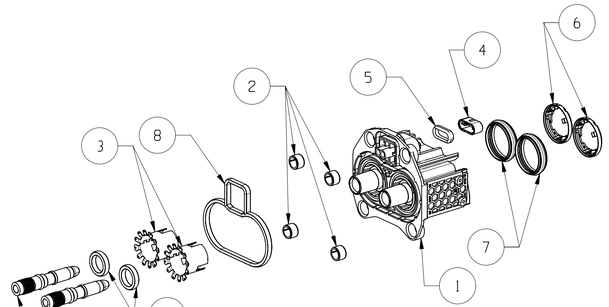

EXPLODED VIEW

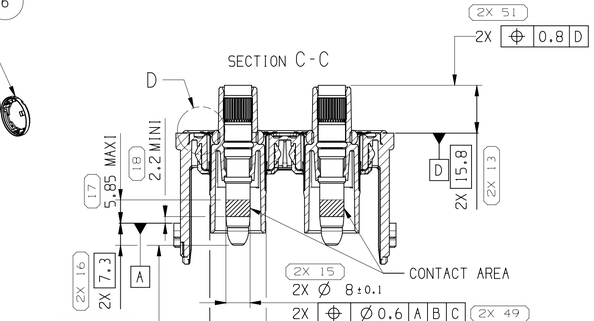

3D VIEW

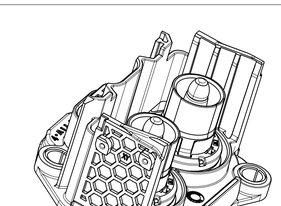

SCALE 1:1

INTERLOCK CAVITIES DEFINITION

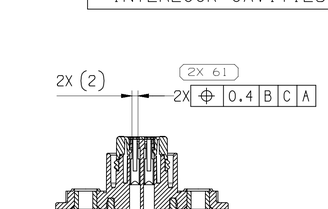

SECTION B-B

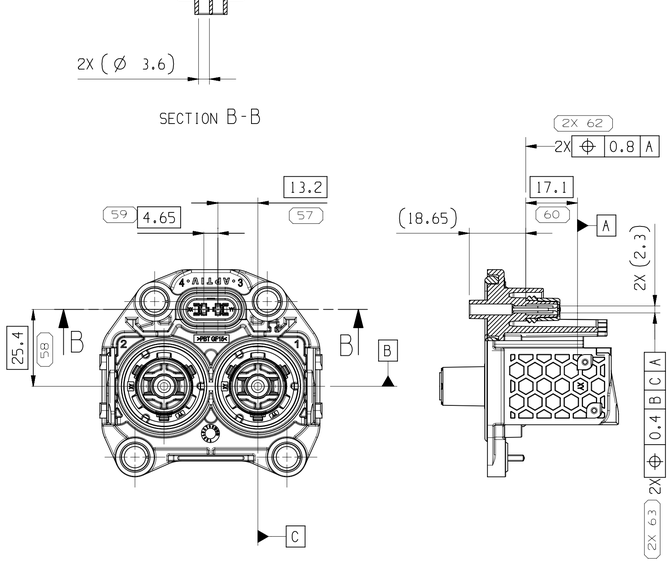

REP	TITLE	APTIV P/N	COLOR	MATERIAL	QUANTITY
1	HEADER HOUSING	35253424	ORANGE	PBT GF15	1
2	METALLIC INSERT 6MM	33272652	-	HIGH CARBON STEEL	4
3	HEADER INDIVIDUAL SHIELD	35253443	-	COPPER ALLOY	2
4	INTERLOCK CAP	35016921	GRAY	PBT GF15	1
5	INTERLOCK SEAL	33501740	BLUE	LSR 50 SHORE A	1
6	PLASTIC CAP	35253446	BLACK	PA66 GF30	2
7	UNIT SEAL	35253445	BLUE	LSR 50 SHORE A	2
8	SALT SPRAY SEAL	35253444	GRAY	LSR 30 SHORE A	1
9	PIN CHIMNEY SEAL	35253455	GRAY	LSR 30 SHORE A	2
10	RCS890 PIN KNURLED	35082428	-	-	2

BILL OF MATERIAL

A LINE DRAWN THROUGH A PART NUMBER INDICATES THAT PHYSICAL PARTS ARE NOT AVAILABLE FOR ORDERING.

PART NUMBERS THAT DO NOT HAVE A LINE PRESENT INDICATE THAT PHYSICAL PARTS ARE AVAILABLE FOR ORDERING.

CONTACT APTIV SALES TO ASSURE AVAILABILITY OF PARTS.

LA LIGNE TRACÉE SUR LA RÉFÉRENCE PIÈCE INDIQUE QUE LA PIÈCE N'EST PAS DISPONIBLE À LA COMMANDE

LES RÉFÉRENCES PIÈCES QUI NE SONT PAS BARRÉES INDIQUENT QUE CELLES-CI SONT DISPONIBLES PHYSIQUEMENT POUR ÊTRE COMMANDÉES

CONTACTER LE SERVICE COMMERCIAL DE APTIV POUR S'ASSURER DE LA DISPONIBILITÉ DES PIÈCES

R 0.1 MAX
R 0.2 MAX
SHARP CORNER TOLERANCE

DIM TO CHECK
COTES À VÉRIFIER
( ) DIM FOR HELP
COTES POUR INFO
THEORETIC DIM
COTES THÉORIQUES

DWG TYP
CUSTOMER PART DRAWING
WEIGHT (GR)
VOLUME (CM³)
ROUTING
DISTR CODE
D
UNLESS OTHERWISE SPECIFIED

GENERAL TOLERANCES ACCORDING TO:

GD&T ACCORDING TO:

REFERENCE
-

FIRST ANGLE PROJECTION

DO NOT SCALE
USE MATH DATA
CAD NX

•APTIV•

CONNECTION SYSTEMS
Epernon, France

COPYRIGHT 2020 APTIV. ALL RIGHTS RESERVED.

THIS DRAWING IS THE PROPERTY OF APTIV AND CONTAINS APTIV CONFIDENTIAL INFORMATION. THE REPRODUCTION, DISTRIBUTION AND UTILIZATION OF THIS DOCUMENT OR ITS RELATED CAD MATH DATA, AS WELL AS COMMUNICATION OF ANY CONTENT TO OTHERS, WITHOUT EXPRESS AUTHORIZATION, IS PROHIBITED.

CE PLAN EST LE PROPRIETE DE APTIV ET CONTIENT DES INFORMATIONS APTIV CONFIDENTIELLES LA REPRODUCTION, LA DISTRIBUTION ET L'UTILISATION DE CE DOCUMENT OU DE SES DONNÉES MATHÉMATIQUES CAO, AINSI QUE LA COMMUNICATION DE TOUT CONTENU À AUTRUI, SANS AUTORISATION EXPRESSE EST INTERDITE

		DATE
DR	PRABU T	09AP20
APVD1	LUIS, MICHAEL	09AP20
APVD2	VENARD MARINE	09AP20
APVD3		
APVD4		
APVD5		

SUBSTANCES OF CONCERN AND RECYCLED CONTENT PER APTIV 10949001
MATIERES PROSCRITES ET CONTENU RECYCLABLE SELON APTIV 10949001

MATERIAL
SEE TABLE

DRAWING NAME
2W HEADER RCS 890 SW
MALE CONNECTOR
35253704-CUS02

DRAWING NUMBER
35253704

SIZE	SCALE	FRAME NO	SHEET NO	STG	REV	N/P
A1	1:1	1 OF 1	1 OF 2	R	01	-

User: LBA39
Dwg: 35253704-CUS02-S01/01 Date: 15-Apr-20 Time: 16:59:50
LBA39_04152020_13:29.Pdf.cus

Mouser Electronics

Authorized Distributor

Click to View Pricing, Inventory, Delivery & Lifecycle Information:

Aptiv:
35254402