SYMBOL DEFINITION		
A DIMENSION WITHOUT AN INSPECTION REPORT SYMBOL ( ) DOES NOT REQUIRE INSPECTION. IT MAY BE CONTROLLED ON THE INDIVIDUAL COMPONENT DRAWING.	TOTAL NO OF INSPECTIONS REQUIRED	5
	LAST NO. USED	5

MISSING SYMBOLS
NO MISSING SYMBOL NUMBER

DWG STATUS DATE	STG	REV	N/P	CHG	ZONE	REVISION HISTORY	AUTH	DR	APVD1	APVD2
03DE99	R	001	-	-		ALL PARTS - REDRAWN TO PD	990009	EOV	CMP	RH
03DE99	R	002	-	-		15324973-76 & 15324979 - RELEASED	990005	EOV	CMP	RH
17MY00	R	003	-	-		15393249 - RELEASED	000005	MAC	MAC	MM
07NO00	R	004	-	-		15324973-76 & 15324979 - REVISED	202978	JLZ	EAR	JR
07NO00	R	005	-	-		15393249 - REVISED MYLAR & CABLE SEAL ASM COLUMN	204413	EAR	EAR	JR
19JA01	R	006	-	-		UPDATED PDM ATTRIBUTES	205150	JLZ	JLZ	JR
09JA01	R	007	-	-		15393249 - PM009216 WAS PM002196 AND "G" DIM WAS 5.75 +/- 0.15	205774	MAC	MAC	TP
29MR01	R	008	-	-		15393249 - MAT'L SPEC WAS PM009216	207669	FMH	FMH	TP
06NO01	R	009	-	-		12048086 - UPDATED PDM ATTRIBUTES	215063	MRL	MRL	DLB
10FE03	R	10	-	-		15324974 AND 15324976 - UPDATED PDM ATTRIBUTES	236300	BRB	BRB	MLP
05AP04	R	11	-	-		12052925,12052924,15393249,15324979, 15324976,15324975,15324973,12186769, 12129926,12110213,1208967B,12089441, 12084193,12048087,AND 12048086 - UPDATED MAT'L SPECS, REMOVED MAT'L SPEC NOTES, NOTE 9 WAS 10 AND REMOVED OLD NOTE 9, REMOVED " Ø A" DIM 2 PLCS AND "A" COLUMN FROM CHART,ADDED COLOR COLUM TO CHART	251238	BRB	BRB	MR
19NO04	R	12	-	-	-	REVISED CHART	261378	MLM	MLM	MR
23FE05	R	13	-	-		12048086,12048087,12084193,1208967B, 12110213,12186769,12052924,12052925, 12124669,12089442 AND 12186770 ADDED RESTRICTED STATUS; 15324973-4976 AND 15324979 MATL SPEC WAS M3466; ADDED NOTES COLUMN TO CHART; NOTE 7 WAS 9, NOTE 8 WAS 7 AND NOTE 9 WAS 8; REMOVED DIM 'C' FROM TYPE 402 VIEW	265239	RH	RH	MR
10JN05	R	14	-	-		REVISED GRAPHICS	269180	GPS	JVM	MPR
17FE06	R	15	-	-		REVISED CHART	277502	MM	MM	MR
03MR06	R	16	-	-		15324973-76 & 15324979 - MAT'L SPEC WAS M3469	277946	HCG	JVM	MR
17AU06	R	17	-	-		15324975 - OBSOLETE	273517	CCV	AUG	MR
03OC06	R	18	-	-		ALL ACTIVE PARTS - ADDED SEALING RIBS VIEWS, OVERALL LENGTH LABEL, SEALING RIBS LABEL, ANTI-STICK RING OPTIONAL CONSTRUCTION 1 & 2 VIEWS AND DIMS (2 PLCS); 12084193 & 12124669 - REMOVED RESTRICTED, OPTIONAL CONSTRUCTION VIEWS, CONSTRUCTION LINE VIEWS, TYPES 404, 405 & 406 VIEWS AND COLUMNS C,F & G FROM CHART; DIM Ø 3.45 WAS Ø C, DIM Ø5.75 ±0.2 WAS Ø G & DIM 7.5 WAS F, CABLE OD RANGE 1.2 - 1.7 WAS 1.29 - 1.7 AND EQUIVALENT CABLE SEAL COLUMN: 15324973-74, 15324976 & 15324979 - MAT'L SPEC M3469 WAS M3466 & ADDED ALTERNATE MAT'L SPEC M3466XXX	285225	JBD	FRG	MPR
11OC07	R	19	-	-		ALL ACTIVE PARTS - ADDED NOTE 10, USAGE COLUMN AND CHAMFER TO TYPES 401, REVISED TYPE 403 TO 401	402596	RH	RH	MPR
30SE08	R	20	-	-		13713910 & 13713911 - RELEASED	406278	RRR	AGN	RRR
01MY09	R	21	-	-		ALL ACTIVE PARTS - UPDATED MAT'L SPEC TO GENERIC CALLOUT, REMOVED ALTERNATE MAT'L SPEC COLUMN FROM CHART; 12186769 - REMOVED NOTE FROM CHART AND 13713910 & 13713911 - OBSOLETE	407894	RTV	AUG	MPR
03JN09	R	22	-	-		13766444 - RELEASED	408127	ECB	AUG	JGS
24JL09	R	23	-	-		ALL PARTS - ADDED VOLUME COLUMN AND REMOVED COLOR COLUMN	408462	ECB	AUG	MPR
30OC09	R	24	-	-		12084193 - UPDATED PDM ATTRIBUTES	409370	JAR	JAR	MPR
15MY10	R	25	-	-		UPDATED PDM ATTRIBUTES	410847	MAL	MAL	JFB
15JN10	R	26	-	-		12052924-25, 12089442, 12124669, 12146011, 12186770 & 13713910 - MOVED TO SHT 6; 12048086-87 & 1208967B - OBSOLETE AND ADDED "REPLACED BY" COLUMN ON CHART	411067	AGM	JAA	MPR
12JA11	R	27	-	-		15324973 - UPDATED PDM ATTRIBUTES	413028	AHY	DMC	GEM
13SE19	R	28	-	-		1208967B - REINSTATED AND ADDED RESTRICTED USAGE COLUMN	444511	JGO	JAA	JAF
05OC21	R	29	-	-		ALL ACTIVE PARTS - REVISED "TO IMPROVE SEAL" NOTE	555461	GDH	JAA	ACR

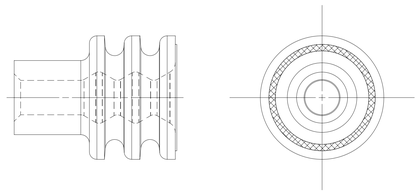

OPTIONAL CONSTRUCTION 1
(ANTI-STICK RING)

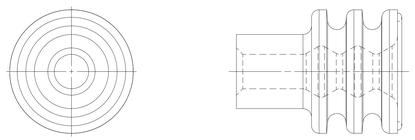

OPTIONAL CONSTRUCTION 2
THIS IS THE PREFERRED CONSTRUCTION FOR NEW TOOL BUILDS
(ANTI-STICK RING)

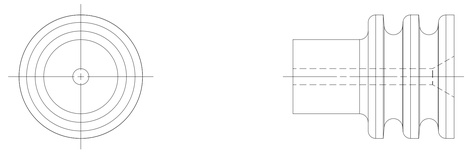

TYPE 402
SAME AS TYPE 401
EXCEPT AS SHOWN

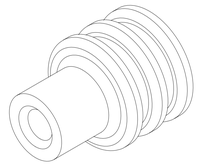

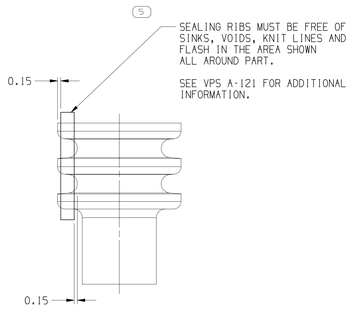

TYPE 401

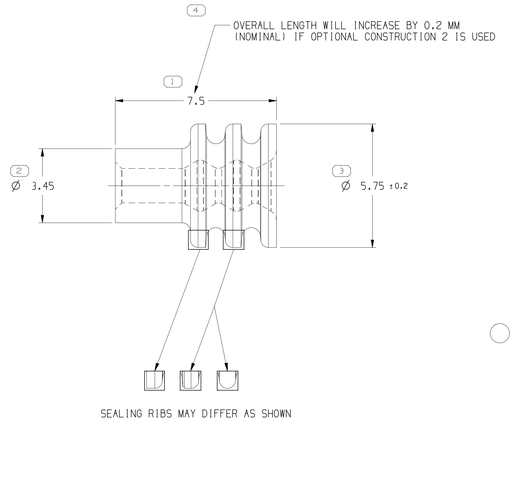

SEALING RIBS MAY DIFFER AS SHOWN

NOTES

1. UNLESS OTHERWISE SPECIFIED AND/OR INDICATED:

   DIMENSIONS ARE TO FACE OF VIEW SHOWN AND AUTOMATICALLY ROUNDED BY COMPUTER FOR INSPECTION (SEE MATH MODEL FOR PRECISE DIMENSIONS). FOR ALL OTHER DIMENSIONS NOT SHOWN BUT REQUIRED FOR TOOL BUILD, SEE MATH MODEL FOR PRECISE TOOL PATH DATA.

2. SEALING RIBS ARE IDENTICAL, EXCEPT AS SHOWN.

3. PARTS NOT MADE ON FLASHLESS MOLDS MUST BE DEFLASHED, WASHED AND DRIED AFTER MOLDING. WASHING SHOULD OCCUR WITHIN 12 HOURS AFTER MOLDING.

4. PARTS ARE TO BE PACKAGED IN SEALED PLASTIC BAGS. GROSS WEIGHT INCLUDING CARTON IS NOT TO EXCEED 34 POUNDS.

5. PARTS MUST BE MADE FROM VIRGIN MATERIAL ONLY.

6. TO IMPROVE SEAL PROCESSING ON SLIPPERY OR SMOOTH CABLE INSULATION, THE APPLICATION ENGINEER MAY SPECIFY THE NEXT SMALLER SEAL SIZE P/N IN PLACE OF THE INDICATED SEAL FOR THE "CABLE O.D." LISTED IN THE CHART.

7. DESIGNED FOR 0.8 MM^2 SOLID CORE DRAIN WIRE Ø 1.002 ±0.007

8. PARTS MADE OF FLUOROSILICONE MUST BE POST-CURED FOR 4 HRS AT 400° F.

9. THIS PRODUCT IS NOT CATEGORIZED AS AN APPEARANCE ITEM, MINOR IMPERFECTIONS INCLUDING, BUT NOT LIMITED TO, FLOW MARKS, COLOR BLEMISHES, GATE VESTIGE, AND SOFT FLASH THAT DO NOT AFFECT THE FIT, FORM, OR FUNCTION OF THE PART ARE PERMISSIBLE PER EANP_4-3_CS_01_EN.

10. P/N 13713911 MUST BE POST-BAKED FOR 4 HOURS AT 400° F.

11. SEE 12010295 SHEET 6 FOR MYLAR ASSEMBLY INFORMATION.

PART NO CABLE SEAL	REV	N/P	MATERIAL SPECIFICATION AND COLOR	TYPE	CABLE O.D. ±0.05 SEE NOTE #6	CAVITY ID	EQUIVALENT CABLE SEAL	NOTES	VOLUME	REPLACED BY	RESTRICTED USAGE
13766444	01	AB	SILICONE METHYL/VINYL GRAY	401	2.15-1.6	5.2	15324979	-	0.099	-	-
13713911	01	AA	SILICONE METHYL/VINYL GREEN	401	2.85-2.03	5.2	-	SEE NOTE 10	0.092	-	-
15393249	01	AK	FLUOROSILICONE METHYL/VINYL GREEN	401	2.15-1.6	5.2	-	SEE NOTE 8	0.099	-	-
15324979	01	AK	SILICONE METHYL/VINYL GRAY	401	2.15-1.6	5.2	12186769	-	0.099	-	-
15324976	01	AK	SILICONE METHYL/VINYL WHITE	401	2.15-1.6	5.2	12089678	-	0.099	-	-
15324975	01	AF	SILICONE METHYL/VINYL OCHER	402	1.009-0.995	5.2	-	SEE NOTE 7	0.109	-	-
15324974	01	AL	SILICONE METHYL/VINYL BLUE	401	1.7-1.2	5.2	12048087	-	0.105	-	-
15324973	01	AL	SILICONE METHYL/VINYL REDDISH BROWN	401	2.85-2.03	5.2	12048086	-	0.092	-	-
12186769	B10	-	SILICONE METHYL/VINYL GRAY	401	2.15-1.6	5.2	15324979	-	0.099	-	-
12129926	B8	-	FLUOROSILICONE METHYL/VINYL ORANGE	401	1.7-1.29	5.2	-	SEE NOTE 8	0.105	-	-
12110213	B9	-	FLUOROCARBON BLUE	401	2.65-1.85	5.2	-	-	0.099	-	-
12089678	A12	-	SILICONE METHYL/VINYL WHITE	401	2.15-1.6	5.2	15324976	-	0.099	-	RESTRICTED
12089441	B	-	SILICONE METHYL/VINYL YELLOW	401	2.15-1.6	5.2	-	-	0.099	-	-
12084193	A9	-	SILICONE METHYL/VINYL TAN	402	1.009-0.995	5.2	-	SEE NOTE 7	0.109	-	-
12048087	02	AH	SILICONE METHYL/VINYL BLUE	401	1.7-1.29	5.2	15324974	-	0.105	15324974	-
12048086	02	AG	SILICONE METHYL/VINYL REDDISH BROWN	401	2.85-2.03	5.2	15324973	-	0.092	15324973	-

A ___ LINE DRAWN THROUGH A PART NUMBER INDICATES THAT PHYSICAL PARTS ARE NOT AVAILABLE FOR ORDERING.

PART NUMBERS THAT DO NOT HAVE A LINE PRESENT INDICATE THAT PHYSICAL PARTS ARE AVAILABLE FOR ORDERING.

CONTACT APTIV SALES TO ASSURE AVAILABILITY OF PARTS.

DWG TYPE: PART DRAWING

STYLE

VOLUME (CM³)

DISTR CODE

UNLESS OTHERWISE SPECIFIED

THIS DOCUMENT IS IN ACCORDANCE WITH ASME Y14.5M-1994 AS AMENDED BY ISO/ASME 8-2001 DIMENSIONING AND TOLERANCING. ALL DIMENSIONS, GEOMETRIC TOLERANCES AND RELATED DATUMS APPLY PER ASME Y14.5M. RULE 1 PERFECT FORM AT MMC DOES NOT APPLY WHEN RELATIONSHIP BETWEEN FEATURES IS ESTABLISHED BY ORIENTATION OR LOCATION TOLERANCES. SEPARATE POSITION CALLOUTS MAY BE GAGED SEPARATELY. REGARDLESS OF DATUM REFERENCE.
ALL DIMENSIONS ARE IN MILLIMETERS

(3) PROCESS SENSITIVE DIMENSION

DIMENSIONS ENCLOSED IN ( ) INDICATE REFERENCE DIMENSIONS AND NO TOLERANCE LIMITS ARE ESTABLISHED

REFERENCE

DIMENSIONAL RANGE (MM) FROM TO	> 0 20	> 20 30	> 30 70	> 70 100	>100 150	>150 200	>200 250	>250 300	>300 400
TOLERANCE UNLESS OTHERWISE SPECIFIED	±0.15	±0.2	±0.3	±0.4	±0.5	±0.6	±0.8	±1	±1.2
ANGULAR TOLERANCE ±2°									

THIRD ANGLE PROJECTION

DO NOT SCALE
USE MATH DATA

NX

•APTIV•

CONNECTION SYSTEMS
WARREN, OH

COPYRIGHT 1989 APTIV. ALL RIGHTS RESERVED.
THIS DRAWING IS THE PROPERTY OF APTIV AND CONTAINS APTIV CONFIDENTIAL INFORMATION. THE REPRODUCTION, DISTRIBUTION AND UTILIZATION OF THIS DOCUMENT OR ITS RELATED CAD MATH DATA, AS WELL AS COMMUNICATION OF ANY CONTENT TO OTHERS, WITHOUT EXPRESS AUTHORIZATION, IS PROHIBITED.

		DATE
DR		
APVD1	J. HOUGELMAN	13JA89
APVD2	T. MUDREY	26JA89
APVD3	A. HERMANN	31JA89
APVD4		
APVD5		

SUBSTANCES OF CONCERN AND RECYCLED CONTENT PER APTIV 10949001

MATERIAL: SEE CHART

DRAWING NAME: TAXI SEAL CBL 1W M/P

DRAWING NUMBER: 12010295

SIZE	SCALE	FRAME NO	SHEET NO	STG	REV	N/P
A0	10:1	1 OF 2	4 OF	R	29	-

User: JJJF
Date: 12-OCT-21 Time: 09:56:32
Dwg: 12010295 Sheet 4 OF 6
Dwg Type: PART DRAWING
Dwg Size: A0
Dwg Name: 12010295_SHEET_4.DRW

Mouser Electronics

Authorized Distributor

Click to View Pricing, Inventory, Delivery & Lifecycle Information:

Aptiv:
12084193