NOTE	
1	APTIV PRODUCT SPECIFICATION: FE PS 20 016
2	USER'S MANUAL: 35501596-CUS73
3	FLATNESS MEASURED WHEN SCREWED ON FREE STATE, 1.5 mm MAX OF WARPAGE ALLOWED
4	TOLERANCE MEASURED WITH HEADER SCREWED ON THE DEVICE
5	BUSBAR FIXATION: SCREWING TORQUE 5.6N.m±10% BUSBAR HOLE Ø6.5±0.2 BUSBAR MATERIAL: ELASTIC STRENGTH 420 MPa mini.
6	HEADER FOR 3xM6 SCREWS SCREWING TORQUE 8Nm± 10%
7	ASSEMBLY 35084594 IS SHOWN

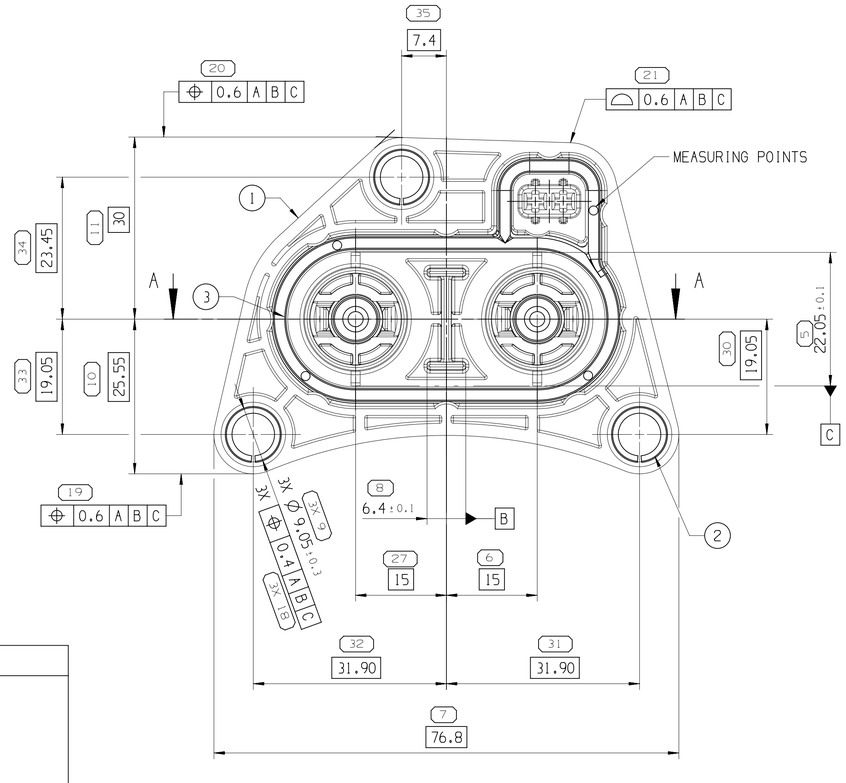

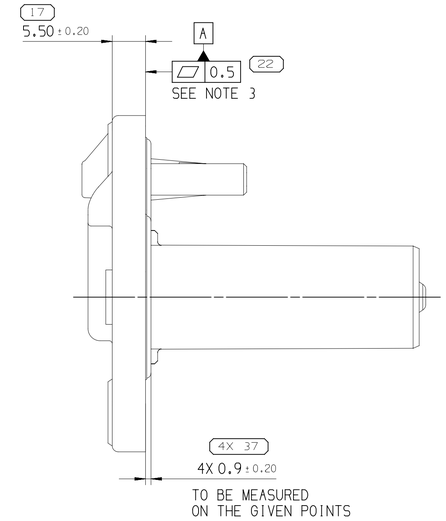

DWG STATUS					ZONE	REVISION HISTORY	AUTH	DR	APVD 1	APVD 2
DATE	STG	REV	N/P	CHG						
22SE20	R	01				INITIAL RELEASE		P.BAL	M.VEN	M.VEN

MARKING

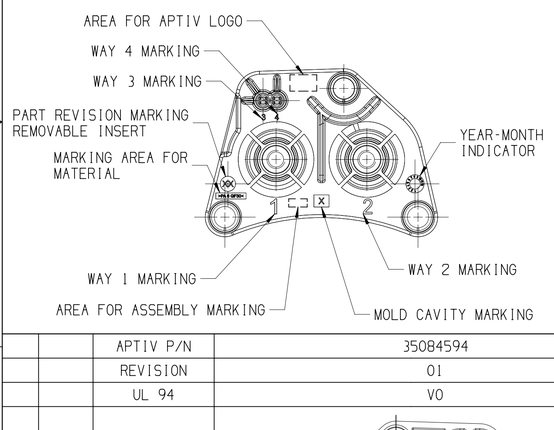

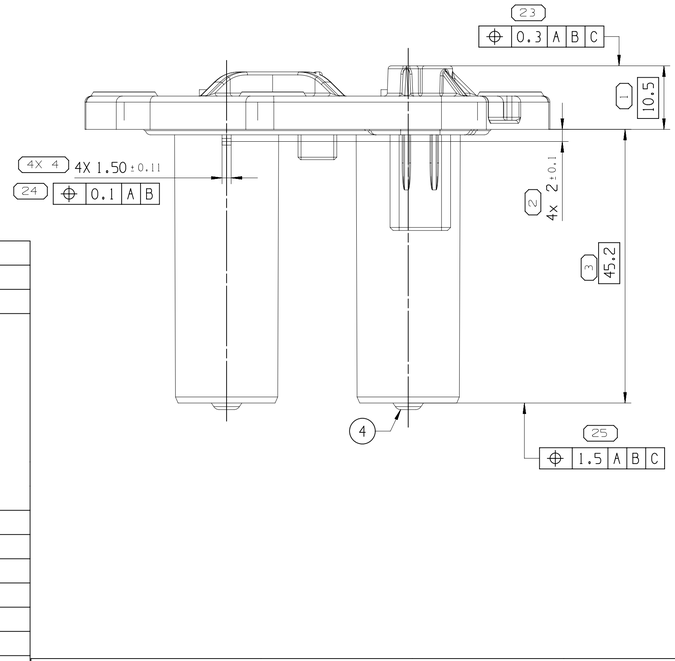

SECTION A-A

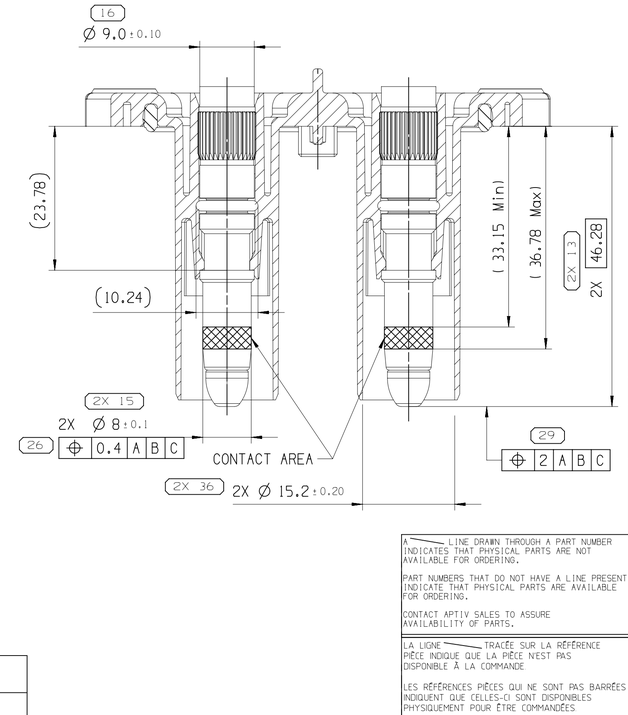

3D VIEW
SCALE 1:1

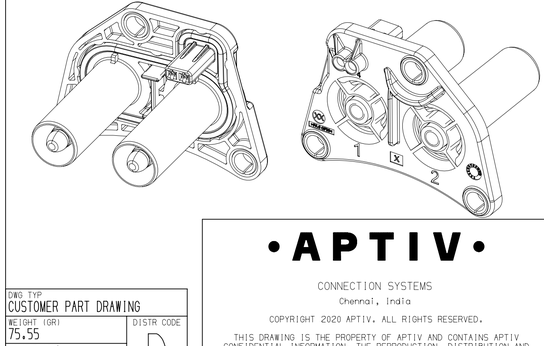

		APTIV P/N	35084594
		REVISION	01
		UL 94	V0
		FOLLOWING FRONT VIEW	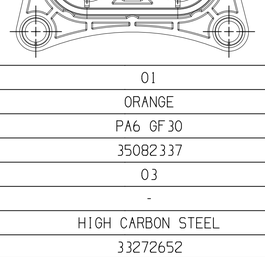
1	OUTER HEADER	QUANTITY	01
		COLOR	ORANGE
		MATERIAL	PA6 GF30
		APTIV P/N	35082337
2	METALLIC INSERT FOR SCREW M6	QUANTITY	03
		COLOR	-
		MATERIAL	HIGH CARBON STEEL
		APTIV P/N	33272652
3	SEAL BOX	QUANTITY	01
		COLOR	GREY MEDIUM
		MATERIAL	SILICONE
		APTIV P/N	35082352
4	KNURLED PIN	QUANTITY	02
		COLOR	-
		MATERIAL	COPPER ALLOY-SILVER PLATED
		APTIV P/N	35082428

TABLEAU CARACTERISTIQUES / PRESTATIONS ATTENDUES
TABLE OF CHARACTERISTICS / FUNCTIONAL FEATURES REQUESTED

Nº DE LA CARACTERISTIQUE A GARANTIR POUR ASSURER LA PRESTATION *CHARACTERISTIC NUMBER TO GUARANTEE IN ORDER TO ENSURE THE FUNCTIONAL FEATURE*	PRESTATION ATTENDUE *FUNCTIONAL FEATURES REQUEST*		
	BRANCHEMENT (GUIDAGE ET POLARISATION) *MATING (GUIDING AND POLARIZATION)*	ETANCHEITE *SEALING*	LIAISON CONTACT ELECTRIQUE *ELECTRICAL CONTINUITY*
9,8	X		
37		X	
26,29,36,48			X

A ——— LINE DRAWN THROUGH A PART NUMBER INDICATES THAT PHYSICAL PARTS ARE NOT AVAILABLE FOR ORDERING.

PART NUMBERS THAT DO NOT HAVE A LINE PRESENT INDICATE THAT PHYSICAL PARTS ARE AVAILABLE FOR ORDERING.

CONTACT APTIV SALES TO ASSURE AVAILABILITY OF PARTS.

LA LIGNE ——— TRACÉE SUR LA RÉFÉRENCE PIÈCE INDIQUE QUE LA PIÈCE N'EST PAS DISPONIBLE À LA COMMANDE

LES RÉFÉRENCES PIÈCES QUI NE SONT PAS BARRÉES INDIQUENT QUE CELLES-CI SONT DISPONIBLES PHYSIQUEMENT POUR ÊTRE COMMANDÉES

CONTACTER LE SERVICE COMMERCIAL DE APTIV POUR S'ASSURER DE LA DISPONIBILITÉ DES PIÈCES

SHARP CORNER TOLERANCE

DIM TO CHECK COTES A VERIFIER / DIM FOR HELP COTES POUR INFO	DIMENSIONAL RANGE (MM)									CHART E1
	FROM	> 0	> 20	> 30	> 70	>100	>150	>200	>250	>300
	TO	20	30	70	100	150	200	250	300	400
	TOLERANCE UNLESS OTHERWISE SPECIFIED									
THEORETIC DIM COTES THEORIQUES	±0.15	±0.2	±0.3	±0.4	±0.5	±0.6	±0.8	±1	±1.2	
	ANGULAR TOLERANCE ±2°									

DWG TYP
CUSTOMER PART DRAWING

WEIGHT (GR)	DISTR CODE
75.55	D
VOLUME (CM³) 27.52	
ROUTING	

UNLESS OTHERWISE SPECIFIED

GENERAL TOLERANCES ACCORDING TO: SEE CHART

GD&T ACCORDING TO: SEE CHART

REFERENCE

FIRST ANGLE PROJECTION

DO NOT SCALE

USE MATH DATA

CAD NX

•APTIV•

CONNECTION SYSTEMS
Chennai, India

COPYRIGHT 2020 APTIV. ALL RIGHTS RESERVED.

THIS DRAWING IS THE PROPERTY OF APTIV AND CONTAINS APTIV CONFIDENTIAL INFORMATION. THE REPRODUCTION, DISTRIBUTION AND UTILIZATION OF THIS DOCUMENT OR ITS RELATED CAD MATH DATA, AS WELL AS COMMUNICATION OF ANY CONTENT TO OTHERS, WITHOUT EXPRESS AUTHORIZATION, IS PROHIBITED.

CE PLAN EST LE PROPRIETE DE APTIV ET CONTIENT DES INFORMATIONS APTIV CONFIDENTIELLES. LA REPRODUCTION, LA DISTRIBUTION ET L'UTILISATION DE CE DOCUMENT OU DE SES DONNÉES MATHÉMATIQUES CAO, AINSI QUE LA COMMUNICATION DE TOUT CONTENU À AUTRUI, SANS AUTORISATION EXPRESSE EST INTERDITE

		DATE
DR	P.BALAJI	29SE20
APVD1	M.VENARD	29SE20
APVD2	M.VENARD	29SE20
APVD3		
APVD4		
APVD5		

SUBSTANCES OF CONCERN AND RECYCLED CONTENT PER APTIV 10949001
MATIERES PROSCRITES ET CONTENU RECYCLABLE SELON APTIV 10949001

MATERIAL
NA

DRAWING NAME
HEADER
DM 2W RCS890
35084609-CUS03

DRAWING NUMBER
35084609

SIZE	SCALE	FRAME NO	SHEET NO	STG	REV	N/P
A1	2:1	1 OF 1	1 OF 2	R	01	

User: KZ5BTM
Model: 35084609-CUS03-S01/01 Date: 06-Oct-20 Time: 14:13:10
KZ5BTM.10062020.10141.984pass.cus

Mouser Electronics

Authorized Distributor

Click to View Pricing, Inventory, Delivery & Lifecycle Information:

Aptiv:
35084594