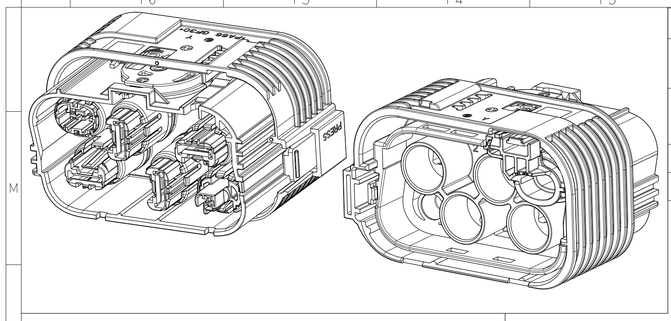

ASSOCIATED PARTS (FOR INFORMATION)

	MVL PART-N°	DELPHI PART-N°	WIRE SECTION	EXTERNAL WIRE DIAMETER	JUF / SWS		
					MVL PART-N°	DELPHI PART-N°	COLOUR
TINNED APEX 950 FEMALE TERMINAL	F018900	33514387	16mm²	Ø6.3 MINI - 6.9 MAXI	F128900	33503295	YELLOW
			10mm²	Ø5.0 MINI - 5.6 MAXI	F028900	33503294	BLUE
TINNED APEX 2.8 FEMALE TERMINAL	54001202	10810733	4mm²	Ø3.4 MINI - 3.7 MAXI	C302400	33512175	REDDISH BROWN
5W APEX950 HEADER CODING 1	-	33402137					

NOTES:

1) MVL PRODUCT SPECIFICATIONS : FE PS 14 005
   - TEMPERATURE CLASS OF THE CONNECTOR : CLASS 3 (-40°C ; +125°C)
   - TEST TEMPERATURE : 125°C
   - VIBRATION CLASS :
     - PRECONDITIONING
     - 3x 16H (COMBINED WITH TEMPERATURE -40°C/+125°C) ; 3.9g
   - SEALING CLASS :
     - 1000mb INITIAL
     - 500mb DURING 30s AFTER ENVIRONMENT TEST
     - JET SPRAY IP69K: VALIDATED ONLY WITH THE COVER (COVER REFERENCE: TO SEE HANDLING MANUAL).
   - MATING FORCE : F < 120N
   - IP2X FINGER PROTECTION CONNECTOR UNMATED
   - IP4X WIRE PROTECTION CONNECTOR MATED
2) PACKAGING : FE PA 10 005
3) HANDLING MANUAL : PU188
4) MASS OF THE PRODUCT : 0.105 kg ±5%
5) THIS DRAWING IS AN EXTRACT OF DETAIL DRAWINGS. IN CASE OF CONFLICT, TO REFER TO THEM.
6) MVL DRAWING OF HEADER CONNECTOR (COUNTERPART): PCC0843589
7) REFERENCE B IS A PARALLEL PLANE WITH AN OFFSET OF 49.30 mm FROM SLIDER FACE.
8) THE MVL PART REVISION B MARKING CORRESPOND TO THE DELPHI PART REVISION 01

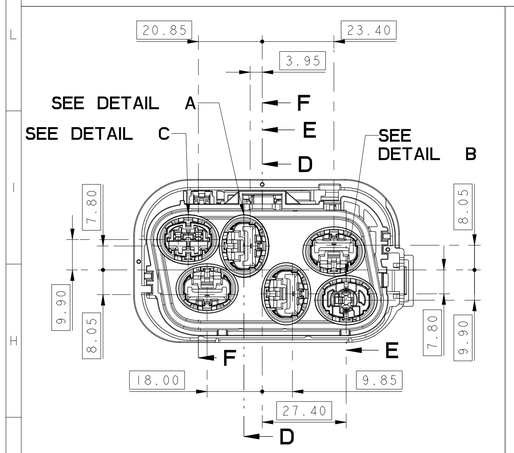

950 APEX CAVITY DETAIL / 4X CAVITIES

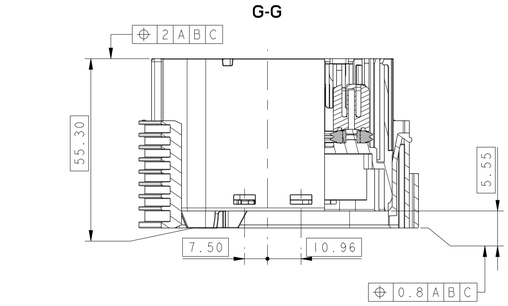

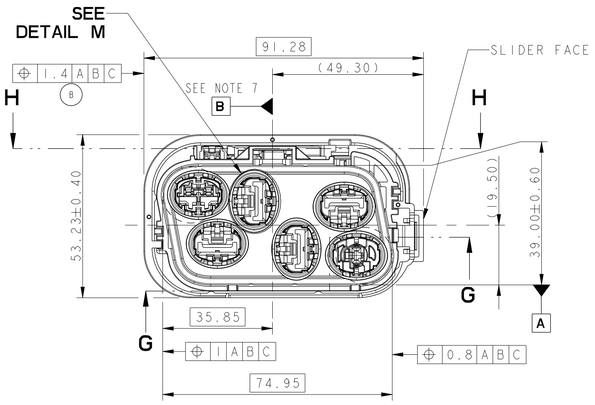

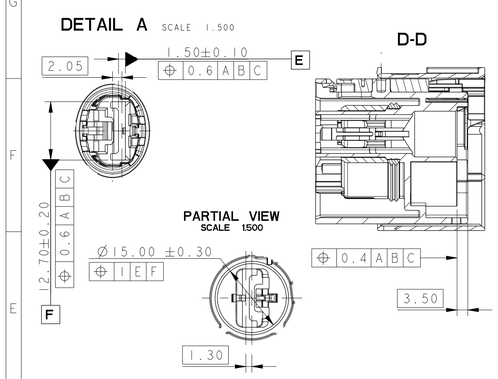

2.8 APEX CAVITY DETAIL / 1X CAVITY

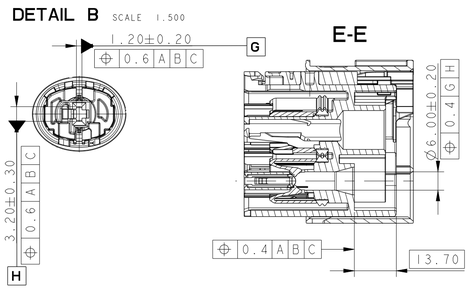

CPA CAVITY DETAIL / 1X CAVITY

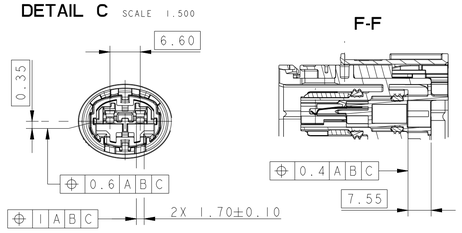

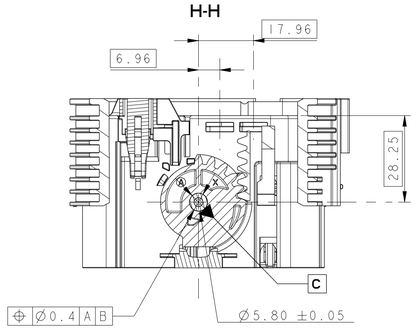

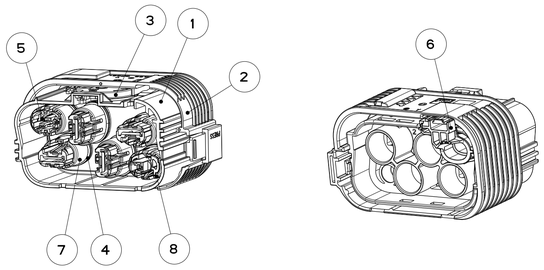

COMPONENTS TABLE CONSTITUTING THE PRODUCT

ITEM	TITLE	COLOUR	MATERIAL	QUANTITY
1	KEY 1 HOUSING	BLACK	PBT GF 30	1
2	SLIDER DEVICE	ORANGE	PA6.6 GF30	1
3	GEAR CAM	BLACK	PA6.6 GF30	1
4	INTERFACIAL SEAL	BLUE	LSR SILICON	7
5	SHORTING BAR	-	STAINLESS STEEL + GOLD PLATING (0.38µm MINI)	1
6	CPA	BLUE	PBT GF15	1
7	PLASTIC CAP 950	DARK GREY	PBT GF15	5
8	PLASTIC CAP 2.8	BLUE	PBT GF15	1

MARKINGS SCALE 0.6

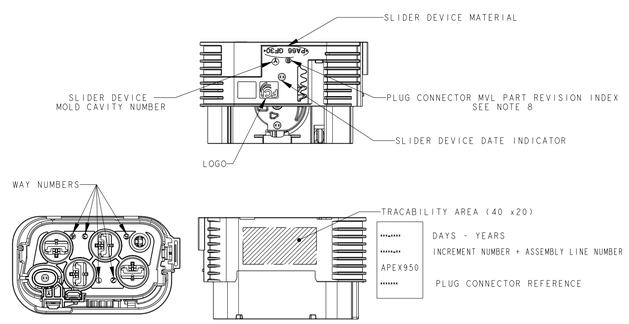

MECHANICAL KEY 1

DELPHI PART NUMBER	33402139 REVISION 01
PLUG FRONT VIEW	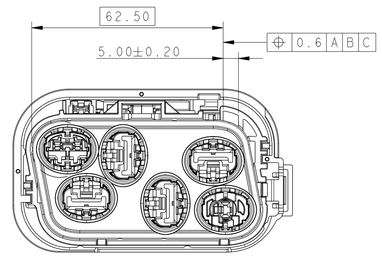

ECN-NO. NUMERO ECN	POSITION POSITION	CHANGE DESCRIPTION MODIFICATION
14-07361	G13	UPDATED LOCALIZATION FROM 1 TO 1.4 ON DIMENSION 91.28
	-	-
	-	-
	-	-
	-	-

PRODUCT SPEC. SPECIF. PRODUIT: SEE NOTE
PACKAGING SPEC. SPECIF. EMBALLAGE: SEE NOTE
APPLICATION SPEC. SPECIF. APPLICATION: SEE NOTE

COPYRIGHT DELPHI CORPORATION AND/OR ITS AFFILIATES. ALL RIGHTS RESERVED. REVISED
THIS DRAWING IS THE PROPERTY OF DELPHI CORPORATION AND CONTAINS DELPHI CONFIDENTIAL INFORMATION. THE REPRODUCTION, DISTRIBUTION AND UTILIZATION OF THIS DOCUMENT OR ITS RELATED CAD DATA DATA, AS WELL AS COMMUNICATION OF ANY CONTENT TO OTHERS, WITHOUT EXPRESS AUTHORIZATION, IS PROHIBITED.
CE PLAN EST LA PROPRIETE DE DELPHI CORPORATION ET CONTIENT DES INFORMATIONS DELPHI CONFIDENTIELLES. LA REPRODUCTION, LA DISTRIBUTION ET L'UTILISATION DE CE DOCUMENT OU DE SES DONNEES INFORMATIQUES CAO, AINSI QUE LA COMMUNICATION DE TOUT CONTENU A AUTRUI, SANS AUTORISATION EXPRESSE, EST INTERDITE.

TOLERANCES TOLERANCES: ±0.2 ±2°
COUNTERPART N° COMPL PARTIE N°: -
DO NOT MEASURE DRAWING NE PAS PRENDRE DE COTES
MATERIAL : MATIERE : SEE BOM
SURFACE FINISH ETAT DE SURFACE: -
COLOUR : COULEUR : SEE BOM
TOOL NO. OUTIL N°: -
ECO Loc. Code CODE B.E.: FE

DELPHI PACKARD ELECTRICAL/ELECTRONIC ARCHITECTURE EPERNON, FRANCE
ISO PROJECTION PROJECTION ISO
DIMENSION IN MILLIMETERS DIMENSIONS EN MILLIMETRES
CAD SYSTEM: pro / eng.
UNIT SIZE FORMAT: A1

	DATE	NAME NOM
CREATED BY CREE PAR	2014/03/11	Gilles SCHMITT
MODIFIED BY MODIF. PAR	2014/07/04	Gilles SCHMITT
CHECKED BY VERIF. PAR	2014/07/04	F BELLIARD
APPROVED BY APPR. PAR	2014/07/07	Jean FABRI

FILE NAME NOM DE FICHIER: PCC0843590
DOCUMENT UNDER PDS CONTROL NO MODIFICATION ALLOWED OUTSIDE. DOCUMENT GERE SOUS P.D.S. PAS DE MODIFICATION EN DEHORS

TITLE DESIGNATION: 5W APEX950 PLUG
PROJECT PROJET: 5W APEX950 POWER CONNECTOR
ESR NO. NUMERO ESR: EU-090590
KAT. NO. NUMERO CAT.: -

DRAWING NUMBER REF. PLAN: PCC0843590
REV. IND.: B
STATE ETAT: SERIAL RELEASED
PART NUMBER REF. ARTICLE: 33402139
REV. IND.: 01
APPROVAL LEVEL NIV. D'APPROBATION: -
SHEET FEUILLE: 1 of / sur 1
SCALE ECH.: 1.00

EUR C04 112 F29

Mouser Electronics

Authorized Distributor

Click to View Pricing, Inventory, Delivery & Lifecycle Information:

Aptiv:
33402139