Silvertel

Evaluation Board User Manual

EvalAg15QiK Evaluation Kit User Manual

Containing Ag321 & Ag320R

Version 1.0 – July 2020

© Silver Telecom 2020

Table of Contents

1 Kit Contents ... 3
2 Introduction ... 3
3 EvalAg321T ... 3
3.1 Board Layout ... 3
3.2 Link Settings ... 3
3.3 Input ... 3
3.4 Operation ... 3
3.5 End of Power Transfer ... 4
3.6 Status Outputs ... 4
3.7 Data Communication ... 4
4 EvalAg320R ... 5
4.1 Board Layout ... 5
4.2 Link Settings ... 5
4.3 Operation ... 5
4.4 Output ... 5
4.5 Ending Power Transfer ... 5
4.1 Data communication ... 5
5 Test Setup ... 6
6 Additional information ... 6
7 Schematic ... 7
7.1 EvalAg321T ... 7
7.2 EvalAg320R ... 8
8 Bill of Materials ... 9
8.1 EvalAg321T ... 9
8.2 EvalAg320R ... 10

Table of Figures

Figure 1: EvalAg321T Board Layout ... 3
Figure 2: EvalAg320R Board Layout ... 5
Figure 3 Basic Test Setup ... 6

© Silver Telecom 2020

1 Kit Contents

- Ag321T Evaluation Board
- Ag320R Evaluation Board
- Ag321T 15W Qi Transmitter Module
- Ag320R 15W Wireless Receiver Module

2 Introduction

This Manual is intended to be a guide to using the EvalAg15QiK evaluation kit, containing an Ag321T Evaluation Board and Ag320R Evaluation Board along with the Ag321T and Ag320R wireless power transmitter and receiver modules.

3 EvalAg321T

3.1 Board Layout

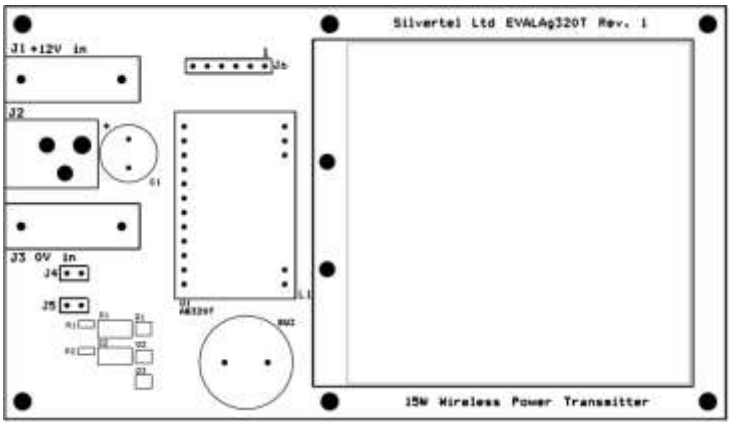

Figure 1: EvalAg321T Board Layout

3.2 Link Settings

J4 – Shutdown Control

J5 – Status Output Enable

3.3 Input

The EvalAg321T evaluation board should be powered using a DC Power supply delivering between +11.5V to +12.5V. The positive supply should be connected to either J1 or the centre pin of J2 and 0V to either the outer ring of J2 or J3.

3.4 Operation

The EvalAg321T polls for a Power receiver placed over the power transfer Primary coil L1, at intervals of 500ms. When an EvalAg320R, 15W Qi compatible, or 5W Qi compatible receiving device has been placed over the coil, The EvalAg321T will negotiate with the receiver to establish a wireless power transfer contract. Once this has happened D1 will become illuminated and a 500ms tone will be produced by the buzzer. D2 will **not** be illuminated.

© Silver Telecom 2020

3.5 End of Power Transfer

When the power receiver requests a non-error related end of power transfer, such as battery fully charged, power transmission will cease and both D1 & D2 will become illuminated.

In case of an error, power transmission will cease, D2 will become illuminated and D1 will no longer be illuminated.

These errors include:-

- Foreign object detection/transmission coil misalignment
- Non recoverable Communications error
- Receiver over loaded
- Receiver regulation error
- Non compatible receiver

If the shutdown pin on the Ag321T is pulled low, by shorting the two pins on J4, power transmission will be halted and disabled indicating an error with D2 illuminated and D1 will not be illuminated.

To resume power transfer after any of the above conditions, a new power transfer will need to be established, this can be done by either power cycling the EvalAg321T or by removing and replacing the receiver coil.

3.6 Status Outputs

If the link on J5 is removed, all status outputs are disabled so D1 and D2 will not be illuminated and BUZ will remain silent.

3.7 Data Communication

J6 can be used in conjunction with J5 of the EvalAg320R to receive data from the powered application for the user. See section 5.6 of the Ag321T datasheet for full description of communications operation.

© Silver Telecom 2020

4 EvalAg320R

4.1 Board Layout

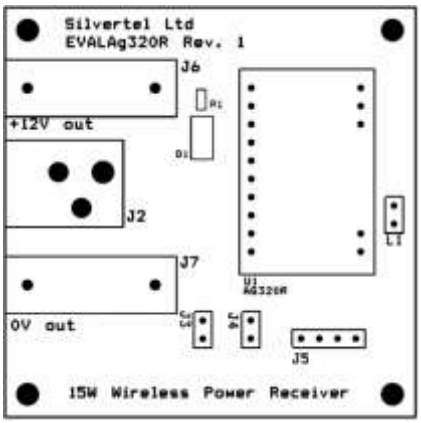

Figure 2: EvalAg320R Board Layout

4.2 Link Settings

J3 – Charge Complete Control

J4 – Cut-off Control

4.3 Operation

The EvalAg320R evaluation board is powered through the power receiver coil, L1. After being placed over the output coil of a wireless power transmitter, such as the included EvalAg321T, The EvalAg320R will negotiate with the transmitter to establish a wireless power transfer contract, once this has occurred and power transmission commences, D1 will become illuminated and output is switched on.

4.4 Output

The EvalAg320R has a 12V output. The high output will be present on J6 or the centre pin of J2, while the low output is available on J7 or the outer ring of J2.

4.5 Ending Power Transfer

When the two pins of J3 are shorted the EvalAg320R will switch off the output and indicate to the power transmitter that the power transfer has completed successfully (e.g. battery fully charged).

When the two pins of J4 are shorted the EvalAg320R will switch off the output and indicate a wireless power transfer error to the power transmitter (e.g. using an external over temperature circuit).

4.1 Data communication

J5 can be used in conjunction with J6 of the EvalAg321T to send data back to the transmitter for the user's application. See section 5.4 of the Ag320R datasheet for full description of communications operation.

© Silver Telecom 2020

5 Test Setup

Figure 3 shows the basic set up using the EvalAg320R evaluation board powered by the EvalAg321T evaluation board. The EvalAg320R should have the load connected before placing it on the primary coil of the EvalAg321T.

The equipment required: -

- Power supply unit, +12V output e.g. 12V bench power supply
- Output power cable and load

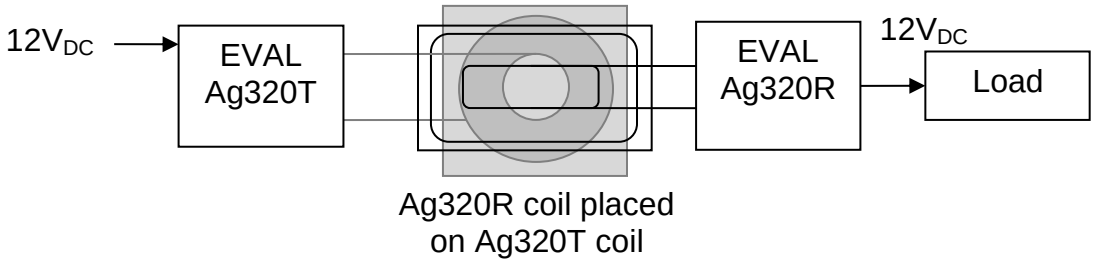

Figure 3 Basic Test Setup

6 Additional information

Full operating conditions and feature set can be found in the respective Ag320R and Ag321T product datasheets, available from www.silvertel.com.

© Silver Telecom 2020

7 Schematic

7.1 EvalAg321T

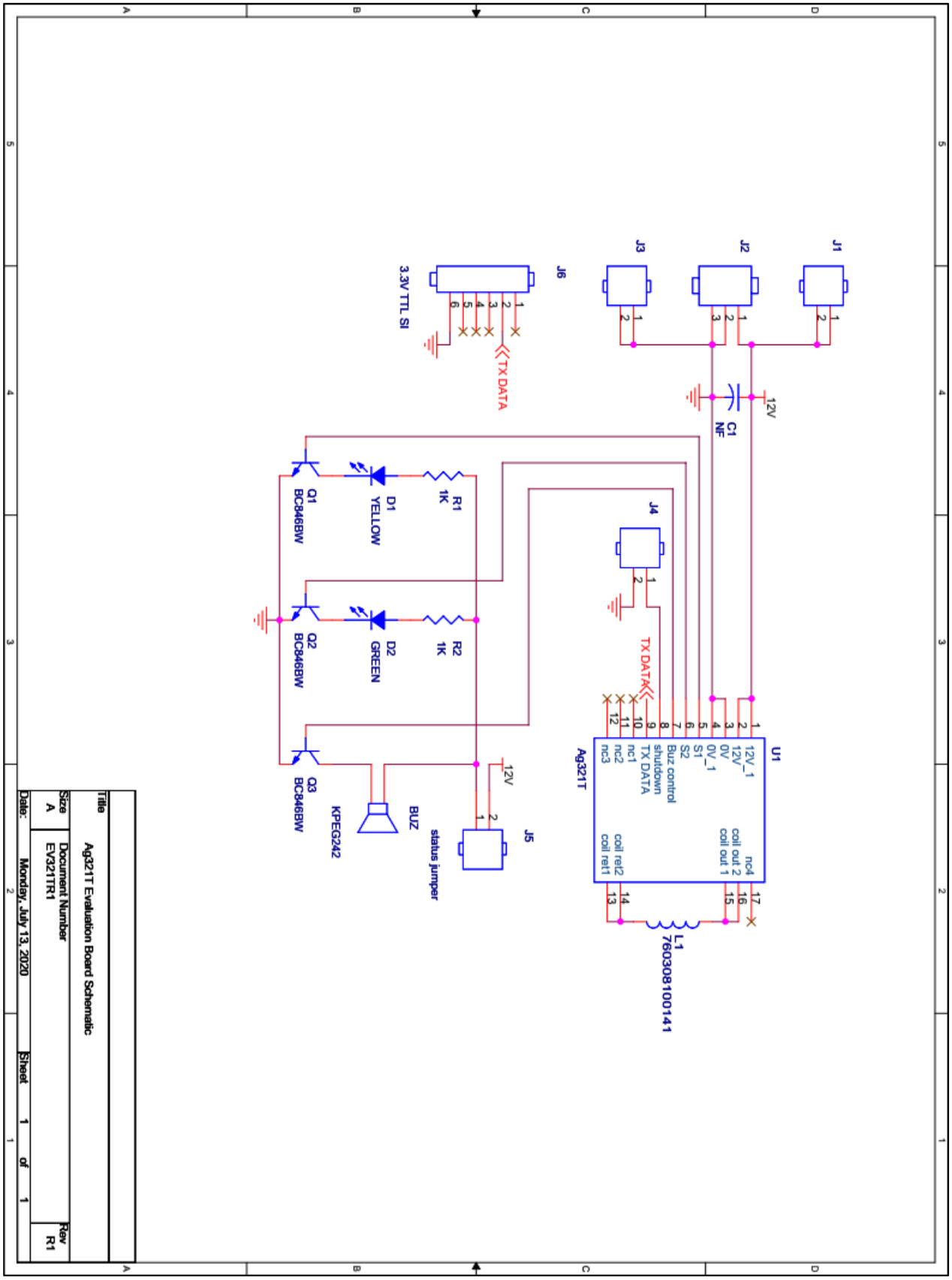

© Silver Telecom 2020

7.2 **EvalAg320R**

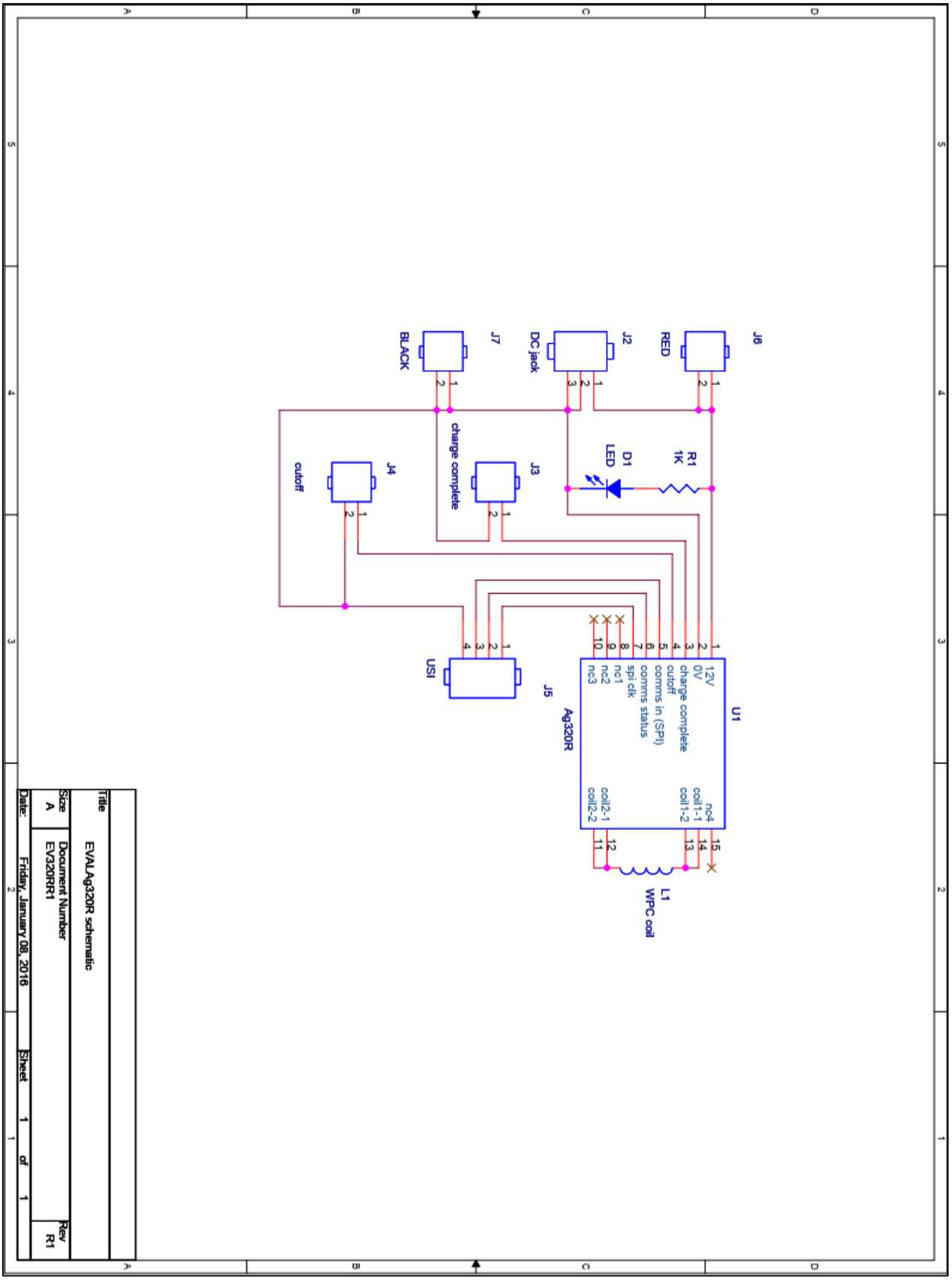

© Silver Telecom 2020

8 Bill of Materials

8.1 EvalAg321T

EvalAg321T Eval Board - Rev.1 - 13th July 2020

Strictly Private and Company Confidential

Silver Part No.	Description:	Value:	Locations:	Qty:	Package:	Rating:	Tol:	Supplier Pt NO:	Comments:	Date
	Module	Ag321T	U1	1	Custom	-	-	Silver Telecom Part		
	Wireless power transfer coil	10uH	L1	1	Through Hole	-	-	Wurth 760308100141		
	Buzzer	1W DC buzzer	BUZ	1	Through Hole	-	-	KPEG242		
	Transistor - Single NPN	BC846BW	Q1,Q2,Q3	3	SOT 323	-	-	Infineon, Onk-Semi, NXP, Diodes Inc		
	SM LED	GREEN LED	D1	1	SMT	-	-	Wurth 150 141 VS7 310 0		
	SM LED	YELLOW LED	D2	1	SMT	-	-	Wurth 150 141 AS7 310 0		
	Capacitor Electrolytic	1uF (4.7/6uF)	C1	0	Through Hole	25V	20%	Panasonic, EEUFR1E471, Wurth 860240475008		
	Resistor - 0603	1k	R1,R2	2	0603	63mW	1%	Royal Ohm, Eurohm & Yageo		
	Red Connector	4mm PCB Socket	J1	1	Through Hole	-	-	Hirschmann 973582100		
	Black Connector	4mm PCB Socket	J3	1	Through Hole	-	-	Hirschmann 973582101		
	DC Power Connector	DC-001	J2	1	Through Hole	-	-	Tobby DC-001-B-3 SMM-R, Wurth 694 108 301 002		
	Link	6 Way	J6	1	Through Hole	-	-	Tobby LHCS-06S-R 060-034 Wurth 613006111121		
	Link	2 Way	J4,J5	2	Through Hole	-	-	Tobby LHCS-02S-R 060-034 Wurth 613002111121		
	Module Socket	12 Way	U1a	1	Through Hole	-	-	Tobby SLW-112-01-G-S		
		2 Way	U1b	1	Through Hole	-	-	Tobby SLW-102-01-G-S		
		3 Way	U1c	1	Through Hole	-	-	Tobby SLW-103-01-G-S		
	Countersunk Plastic Machine Screw	M3 x 6mm	-	4	Mechanical	-	-	rs - 281-367, Tobby M MF		
	Plastic Nut	M3	-	4	Mechanical	-	-	rs - 525-701, Tobby M3		
	Hex Male/Female Threaded Standoff	6mm, M3 x M3	-	4	Mechanical	-	-	rs - 382-567, Tobby TPM		
	ABS coil cover	73.2 mm x 73.2 mm	-	1	Mechanical	-	-	-		
	PCB	Rev 1 - 127.46 mm x 73.20 mm	-	-	-	-	-	-		
	Jumper Links	Links	J5	1	-	-	-	-		
	Feet	Sticky Feet		4				Affix RF-022		
			Total	37						

© Silver Telecom 2020

8.2 EvalAg320R

EVALAg320R Eval Board - Rev.1 - 13th May 2020

Strictly Private and Company Confidential

Silver Part No.	Description	Value	Location:	Qty:	Package:	Rating:	Tol:	Supplier Pt NO:	Comments:
	Module	Ag320R	U1	1	Custom	-	-	Silver Telecom Part	
	Wireless power Receive coil	10.5uH	L1	1	Through Hole	-	-	Abracon AWCCA-4RC-XH11-C01-B	
	SM LED	RED LED	D1	1	SM1	-	-	Wurth - 150 141 RS7 310 0	
	Resistor - 0603	1K	R1	1	0603	63mW	1%	Royal Ohm, Euroohm & Yageo	
	Red Connector	4mm PCB Socket	J6	1	Through Hole	-	-	Hirschmann 973582100	
	Black Connector	4mm PCB Socket	J7	1	Through Hole	-	-	Hirschmann 973582101	
	DC Power Connector	DC-001	J3	1	Through Hole	-	-	Toby DC-001-B-2.5MM-R, Wurth 694 108 301 002	
	Pin Header	4 Way	J5	1	Through Hole	-	-	Toby LHCS-045-R-060-034, Wurth 61300411121	
	Link	2 Way	J3,J4	2	Through Hole	-	-	Toby LHCS-025-R-060-034, Wurth 61300211121	
		10 Way	U1a	1	Through Hole	-	-	Toby SLW-110-01-G-S	
	Module Socket	2 Way	U1b	1	Through Hole	-	-	Toby SLW-102-01-G-S	
		3 Way	U1c	1	Through Hole	-	-	Toby SLW-103-01-G-S	
	Countersunk Plastic Machine Screw	M3 x 6mm	-	4	Mechanical	-	-	m - 291-357, Toby MSF	
	Plastic Nut	M3	-	4	Mechanical	-	-	m - 525-701, Toby M3	
	Hex Male/Female Threaded Standoff	6mm, M3 x M3	-	4	Mechanical	-	-	m - 382-967, Toby TPS	
	ABS cell cover	57.15 mm x 57.15 mm	-	1	Mechanical	-	-	-	
	PCB	Rev 1 - 57.15 mm x 57.15 mm	-	-	-	-	-	-	
	Links	Jumper Link	-	0	-	-	-	-	
			Total	20					

Date

© Silver Telecom 2020

Mouser Electronics

Authorized Distributor

Click to View Pricing, Inventory, Delivery & Lifecycle Information:

Silvertel:
EVALAG15QIK