TFT MODULE SPECIFICATION

RVT121HVHNWN00

HB, IPS HDMI 12.1" LCD DATASHEET

Rev.1.1
2024-08-14

ITEM	CONTENTS	UNIT
LCD Type	TFT/Transmissive/Normally Black/IPS	/
Size	12.1	Inch
Viewing Direction	Free	/
Outside Dimensions (W x H x D)	277.70 x 180.60 x 19.03	mm
Active Area (W x H)	261.12 x 163.20	mm
Pixel Pitch (W x H)	0.204 x 0.204	mm
Resolution	1280 (RGB) x 800	/
Brightness	1000	cd/m^2
Color Depth	16.7 M	/
Pixel Arrangement	RGB Vertical Stripe	/
Controller of the Main Board	RTD2556QR	/
Video Interface	HDMI	/
With/Without Touch	Without Capacitive Touch Panel	/
Power Supply	Power Jack (DC 7.0V - 14.0 V)	V
Weight	583	g

Note 1. RoHS3 compliant

Note 2. LCM weight tolerance: ± 5%.

1. REVISION RECORD

REV NO.	REV DATE	CONTENTS	REMARKS
1.0	2024-03-27	Initial Release	
1.1	2024-08-14	Updated the electrical parameters of power supply current.	

2. CONTENTS

1. REVISION RECORD 2
2. CONTENTS 3
3. MODULE CLASSIFICATION INFORMATION 4
4. MODULE DRAWING 5
5. ABSOLUTE MAXIMUM RATINGS 6
6. ELECTRICAL CHARACTERISTICS 6
7. BACKLIGHT DRIVING CONDITIONS 6
8. ELECTRO-OPTICAL CHARACTERISTICS 7
9. INTERFACE DESCRIPTION 9
   - 9.1 PCB overview 9
   - 9.2 Power connector - DC 10
   - 9.3 HDMI connector – JP1 10
   - 9.4 Touch panel connector - USB-C 10
   - 9.5 External keyboard extension - J1 11
   - 9.6 Backlight PWM &power - J5 11
10. DISPLAY SPECIFICATION 11
11. INSPECTION 12
   - 11.1 Inspection condition 12
   - 11.2 Inspection standard 13
12. RELIABILITY TEST 14
13. LEGAL INFORMATION 15

3. MODULE CLASSIFICATION INFORMATION

RV	T	121	H	V	H	N	W	N	00
1.	2.	3.	4.	5.	6.	7.	8.	9.	10.

NO.	PARAMETER	SYMBOL
1.	BRAND	RV – Riverdi
2.	PRODUCT TYPE	T – TFT Standard
3.	DISPLAY SIZE	121 – 12.1”
4.	MODEL SERIAL NO.	H – High Brightness, IPS
5.	RESOLUTION	V – 1280 x 800 px
6.	INTERFACE	H – HDMI
7.	FRAME	N – Without Mounting Metal Frame
8.	BACKLIGHT TYPE	W – LED White
9.	TOUCH PANEL	N – Without Capacitive Touch Panel
10.	VERSION	00 – (00-99)

Revision:	Changes:	Date:
1.0	Initial Case	2024.03.27

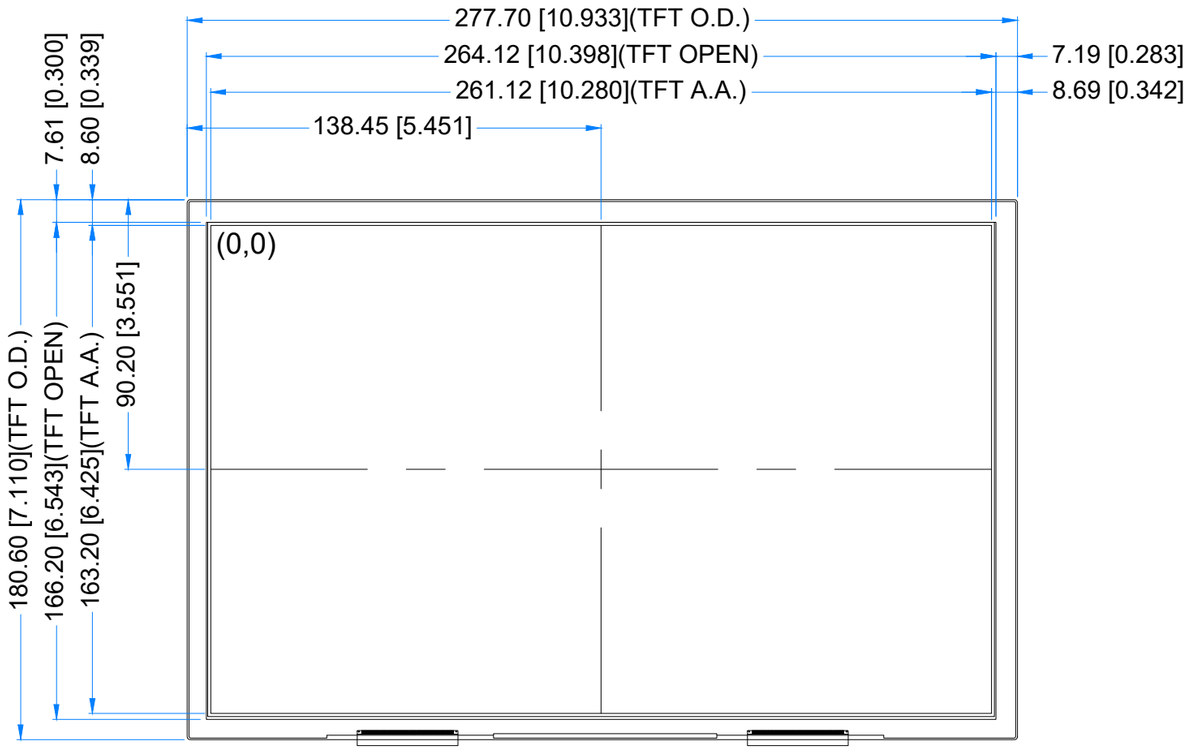

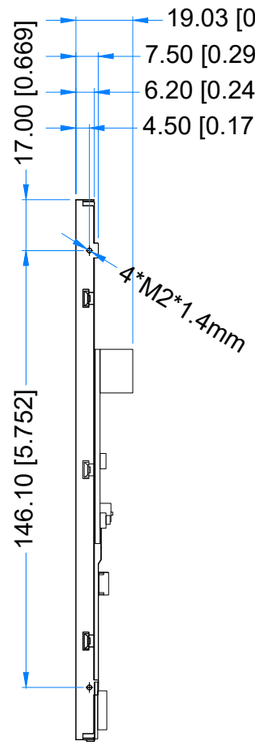

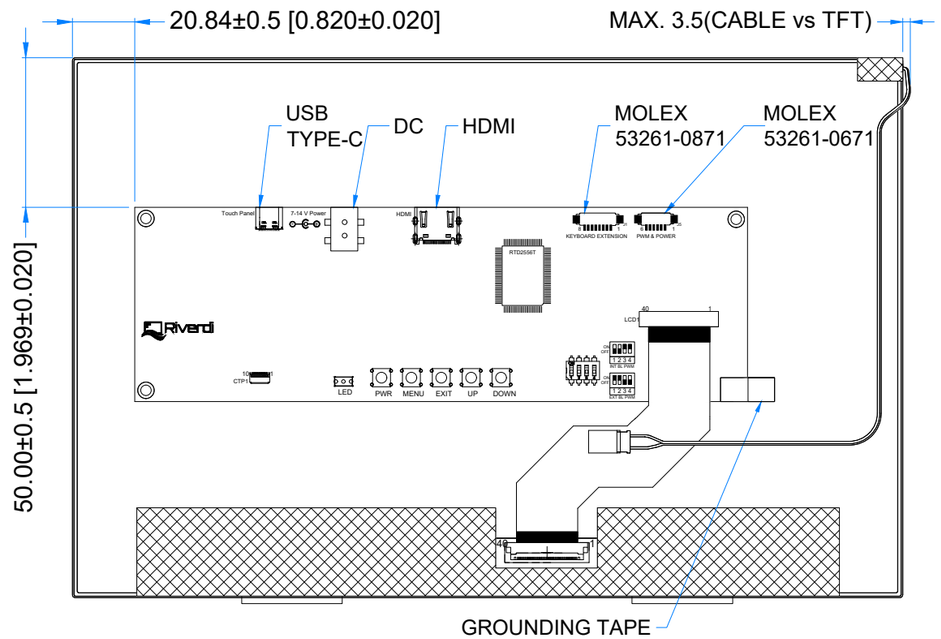

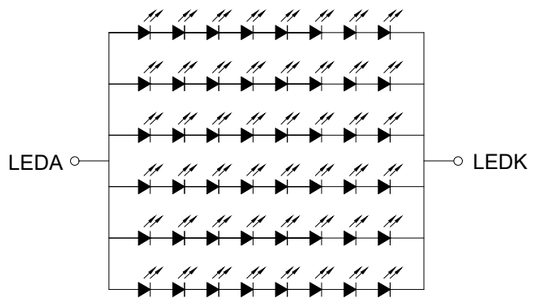

LED Diagram Circuit

PINOUT ON THE 2ND PAGE

LCM NOTES:
1. LCD TYPE: TRANSMISSIVE, NORMALLY BLACK, IPS
2. RESOLUTION: 1280x800
3. VIEWING ANGLE: FREE
4. SURFACE LUMINANCE:1000cd/m^2
5. CONTROLLER IC OF MAIN BOARD: RTD2556QR
6. VIDEO INTERFACE: HDMI
7. POWER SUPPLY: POWER JACK (7.0-14.0V)

GENERAL NOTES:
1. OPERATING TEMPERATURE: -20°C ~ 70°C
2. STORAGE TEMPERATURE: -30°C ~ 80°C
3. WITHOUT INDIVIDUAL TOLERANCE: ±0.3mm[0.012inch]
4. RoHS3 COMPLIANT

PN: RVT121HVHNWN00				
SN:				
DRAWN:	M.Natywa	2024.03.27	1:2.05	
CHECKED:	M.Wierzbowski	2024.03.27	[mm]	
APPR:	T.Soldat	2024.03.27	ISO A3	P. 1 of 1

5. ABSOLUTE MAXIMUM RATINGS

PARAMETER	SYMBOL	MIN	MAX	UNIT
Supply Voltage for Module	VDD	7.0	14.0	V
Operating Temperature	T_{OP}	-20	70	°C
Storage Temperature	T_{ST}	-30	80	°C
Storage Humidity (@ 25 ± 5°C)	H_{ST}	10	-	% RH
Operating Ambient Humidity (@ 25 ± 5°C)	H_{OP}	10	-	% RH

Note. Exceeding maximum values may cause operation or damage to the unit.

6. ELECTRICAL CHARACTERISTICS

PARAMETER	SYMBOL	MIN	TYP	MAX	UNIT	NOTE
Supply Voltage for Module	VDD	7.0	12.0	14.0	V	

PARAMETER	SYMBOL	BL 0%	BL 50%	BL 100%	UNIT	NOTE
Current Drawn from VDD@7.0V	I_{VDD}	300	1130	2835	mA	Note 1
Current Drawn from VDD@12.0V		210	600	1060	mA	
Current Drawn from VDD @14.0V		155	470	830	mA	

Note 1. BL 0% current was measured with BL brightness set to 0%,
BL 50% current was measured with BL brightness set to 50%,
BL 100% current was measured with BL brightness set to 100%.
Test condition: ambient temp is 25 °C

7. BACKLIGHT DRIVING CONDITIONS

PARAMETER	SYMBOL	MIN	TYP	MAX	UNIT
Backlight Power Consumption	WBL	-	5760	-	mW
Lifetime	-	-	50,000	-	

Note. Operating life means the period in which the LED brightness goes down to 50% of the initial brightness. Typical operating lifetime is the estimated parameter.

8. ELECTRO-OPTICAL CHARACTERISTICS

Optical characteristics are determined after the unit has been 'ON' and stable for approximately 30 minutes in a dark environment at 25 ℃. The values specified are at an approximate distance 500mm from the LCD surface at a viewing angle of Φ and θ equal to 0°.

ITEM	SYMBOL	CONDITION	MIN	TYP	MAX	UNIT	RMK	NOTE
Response Time	Tr+Tf	θ=0° ø=0° Ta=25 °C	-	25	35	ms	FIG 1.	4
Contrast Ratio	Cr		-	800	1000	---	FIG 2.	1
Luminance Uniformity	δ WHITE		-	75	-	%		3
Surface Luminance	Lv		-	1000	-	cd/m²		2
Viewing Angle Range	θ	ø = 90°	75	85	-	deg	FIG 3.	6
		ø = 270°	75	85	-	deg		
		ø = 0°	75	85	-	deg		
		ø = 180°	75	85	-	deg		
CIE (x, y) Chromaticity	Rx	θ=0° ø=0° Ta=25 °C	0.22	0.26	0.30	-	FIG 2.	5
	Ry		0.20	0.24	0.28	-		
	Gx		0.34	0.38	0.42	-		
	Gy		0.50	0.54	0.58	-		
	Bx		0.10	0.14	0.18	-		
	By		0.09	0.13	0.17	-		
	Wx		0.28	0.32	0.36	-		
	Wy		0.29	0.33	0.37	-		

Note 1. Contrast Ratio (CR) is defined mathematically as below, for more information see Figure 2.

$$\text{Contrast Ratio} = \frac{\text{Average Surface Luminance with all white pixels (P1, P2, P3, P4, P5)}}{\text{Average Surface Luminance with all black pixels (P1, P2, P3, P4, P5)}}$$

Note 2. Surface luminance is the LCD surface from the surface with all pixels displaying white at BL 100%. For more information see Figure 2.

Lv = Average Surface Luminance with all white pixels (P1, P2, P3, P4, P5)

Note 3. The uniformity in surface luminance δ WHITE is determined by measuring luminance at each test position 1 through 5, and then dividing the minimum luminance of 5 points luminance by maximum luminance of 5 points luminance. For more information see Figure 2.

$$\delta\ \text{WHITE} = \frac{\text{Minimum Surface Luminance with all white pixels (P1, P2, P3, P4, P5)}}{\text{Maximum Surface Luminance with all white pixels (P1, P2, P3, P4, P5)}}$$

Note 4. Response time is the time required for the display to transition from white to black (Rise Time, Tr) and from black to white (Decay Time, Tf). For additional information see Figure 1. The test equipment is BM-7A.

Note 5. CIE (x, y) chromaticity, the x, y value is determined by measuring luminance at each test position 1 through 5, and then calculating the average value.

Note 6. For TFT module the contrast ratio is greater than 10. The angles are determined for the horizontal or x axis and the vertical or y axis with respect to the z axis which is normal to LCD surface. For more information see Figure 3.

Note 7.Viewing angle is measured at the center point of the LCD by CONOSCOPE (ergo-80). For response time testing, the testing data is based on BM-7A. Instruments for Contrast Ratio, Surface Luminance, Luminance Uniformity, Chromaticity the test data is based on SR-3A.

Figure 1. The definition of response time

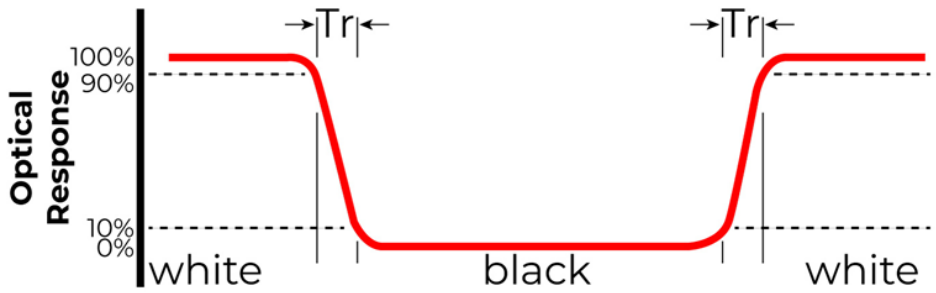

Figure 2. Measuring method for Contrast ratio, surface luminance, Luminance uniformity, CIE (x, y) chromaticity

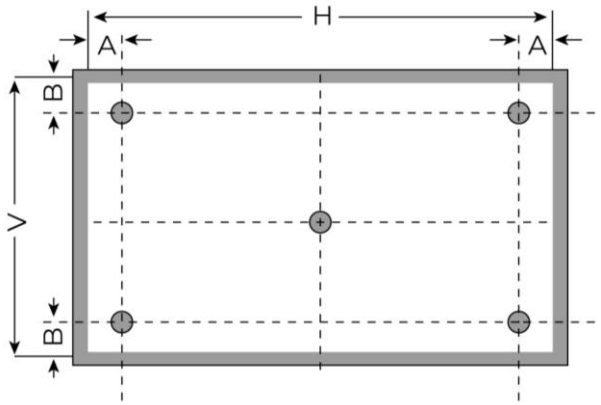

A: 5mm

B: 5mm

H, V: Active Area

Light spot size ⌀=5mm, 500mm distance from the LCD surface to detector lens.

Measurement instrument is TOPCON'S luminance meter BM-5

Figure 3. The definition of viewing angle

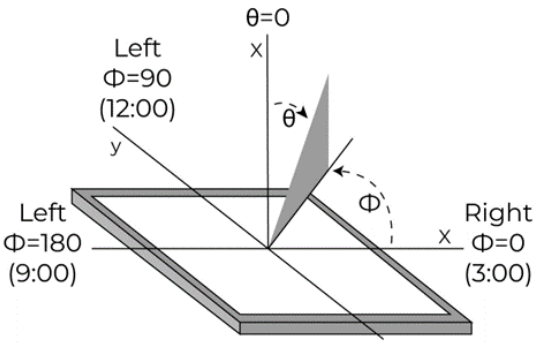

9. INTERFACE DESCRIPTION

9.1 PCB overview

Picture below shows the connectors exact placement and their descriptions.

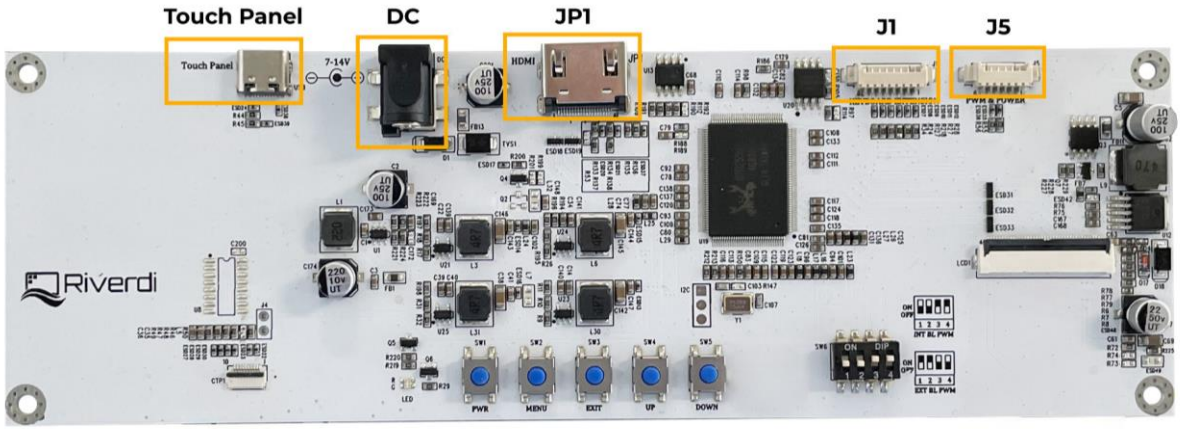

NAME	CONNECTOR	DESCRIPTION	NOTE
Touch Panel	USB-C	Touch panel interface This is only for versions with touch panel.	
DC	Power Jack	DC Jack, (5.5 mm OD; 2.1mm ID) This is the connector to power on the TFT module. It allows DC for voltage range from 7.0V to 14.0V	
JP1	HDMI connector	This is the connector to which you can connect the HDMI signal source to the module.	
J1	External keyboard connector	Molex 53261-0871 or alternative; Horizontal, 1.25mm pitch; 8 pins. The connector is reserved for external keyboard. Performs the same functions: PWR, MENU, EXIT, UP, DOWN as the push buttons on PCB.	Note 1
J5	Backlight PWM & Power	Molex 53261-0671 or alternative; Horizontal, 1.25mm pitch; 6 pins. The unit realizes the function of digital dimming. This connector enables to control backlight PWM externally.	Note 2

Note 1. External keyboards are optional, not included in the standard kit.
Note 2. 4 position-DIP onboard switch SW6 is used to choose the power to backlight.

The settings are:
INTERNAL BL PWM: Set 1&2 to OFF, and 3&4 to ON,
EXTERNAL BL PWM: Set 1&2 to ON, and 3&4 to OFF.

9.2 Power connector - DC

PIN NO.	SYMBOL	DESCRIPTION
1	VDD	Power supply DC; 7.0V-14.0V
2	GND	GND

9.3 HDMI connector – JP1

PIN NO.	SYMBOL	DESCRIPTION
1	TMDS Data 2+	TMDS differential signal 2+
2	TMDS Data2 Shield	Data2 shielding ground
3	TMDS Data 2-	TMDS differential signal 2-
4	TMDS Data 1+	TMDS differential signal 1+
5	TMDS Data1 Shield	Data1 shielding ground
6	TMDS Data 1-	TMDS differential signal 1-
7	TMDS Data 0+	TMDS differential signal 0+
8	TMDS Data 0 Shield	Data0 shielding ground
9	TMDS Data 0-	TMDS differential signal 0-
10	TMDS Data Clock+	TMDS differential signal Clock+
11	TMDS Data Shield	Clo6ck shielding ground
12	TMDS Data Clock-	TMDS differential signal Clock-
13	CEC	Electronic protocol CEC
14	NC	No Connection
15	SCL	I^2C clock Line
16	SDA	I^2C data Line
17	DDC/CEC GND	Data display channel
18	+5V	HDMI 5V
19	Hot Plug Detect	Hot plug Detect

Note 1. Matched Riverdi 4K HDMI cable accessory: 4K HDMI CABLE

9.4 USB-C connector

PIN NO.	SYMBOL	DESCRIPTION
A1	USB_GND	USB_ Ground
B12	USB_GND	USB_ Ground
A4	V_BUS	V_Bus Power; 5V
B9	V_BUS	V_Bus Power; 5V
A5	CC1	Configuration channel
A6	DP1	NC, not connected
A7	DN1	NC, not connected
A8	SBU1	Sideband use
B5	CC2	Configuration channel
B6	DP2	NC, not connected
B7	DN2	NC, not connected
B8	SBU2	Configuration channel
A9	V_BUS	V_Bus Power; 5V
B4	V_BUS	V_Bus Power; 5V

A12	USB_GND	USB_Ground
B1	USB_GND	USB_Ground

Note 1. All the signals in Touch panel connector are in accordance with USB-C standard.

Note 2. Matched Riverdi cable accessory: USB-A 2.0 TO USB-C CABLE

9.5 External keyboard extension - J1

PIN NO.	SYMBOL	DESCRIPTION
1	Down	Page down
2	Up	Page up
3	Exit	Exit
4	Menu	Menu
5	PWR	Power on/off
6	LED_EN	LED Enable; Output signal 3.3V
7	GND	Ground
8	Keyboard VDD	Keyboard VDD; Output 3.3V

Note 1. Matched Riverdi cable accessory: RVA-0108M-1.25FF

9.6 Backlight PWM &power - J5

PIN NO.	SYMBOL	DESCRIPTION	NOTE
1	GND	Ground	
2	GND	Ground	
3	EN	Backlight enable, active H	
4	PWM	PWM input; 3.3V	Note 1
5	VDD	Power supply; 7.0V - 14.0V	Note 2
6	VDD	Power supply; 7.0V - 14.0V	

Note 1. PWM frequency range : 1kHz - 10kHz.
100% PWM duty cycle corresponds to minimum brightness
0% PWM duty cycle corresponds to maximum brightness

Note 2. Pin 5&6 are internally connected with power connector(DC-Jack), VDD.
So, the voltage range is the same as power connector(DC-Jack)

Note 3. 4 position-DIP onboard switch **SW6** is used to choose the power source to backlight. The settings are:

a) INTERNAL BL PWM: Set 1&2 to OFF, and 3&4 to ON,
b) EXTERNAL BL PWM: Set 1&2 to ON, and 3&4 to OFF.

Note 4. Matched Riverdi cable accessory: RVA-0106M-1.25FF-1
Attention! An essential detail concerning this cable setup in your application: pins 1,2 and 5,6 have misleading colors.

10. DISPLAY SPECIFICATION

The TFT of the module applies Riverdi high brightness, IPS, 12.1" LVDS: RVT121HVLNWN00

The supported resolution of the display in this module is 1280*800.

For detailed information, please refer to datasheet of display.

11. INSPECTION

Standard acceptance/rejection criteria for TFT module

11.1 Inspection condition

Ambient conditions:

- Temperature: 25 ± 2°C
- Humidity: (60 ± 10) %RH
- Illumination: Single fluorescent lamp non-directive (300 to 700 lux)

Viewing distance: 35 ± 5cm between inspector bare eye and LCD.

Viewing Angle: U/D: 45°/45°, L/R: 45°/45°

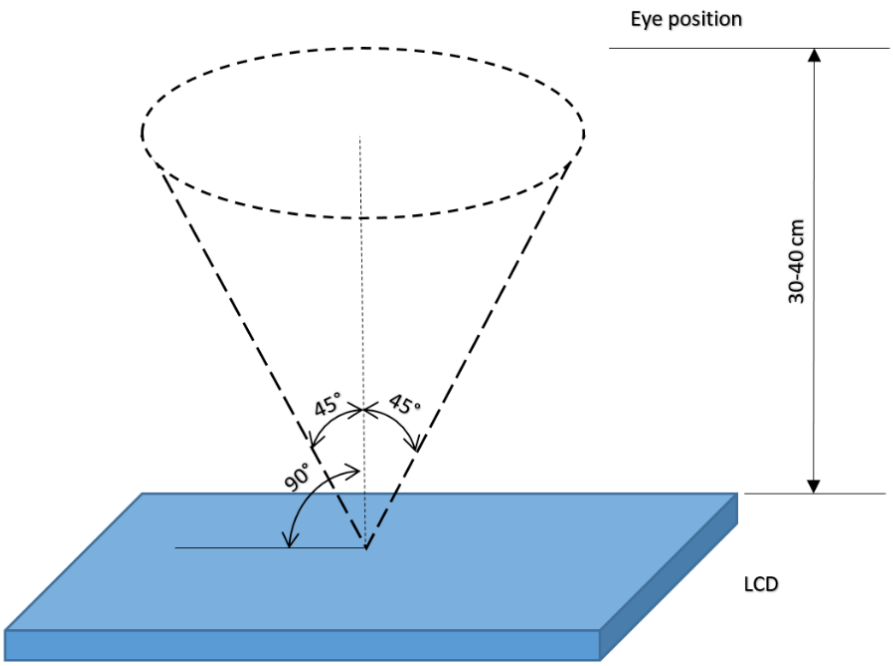

11.2 Inspection standard

The LCD TFT has zero bad pixels. Please refer the item “Bright/Dark dots”.

ITEM	CRITERION		
Black spots, white spots, light leakage, Foreign Particle (round Type)	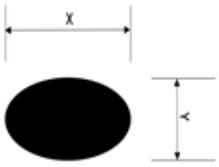	Size = 12.1”	
		Average Diameter	Qualified Qty
		D ≤ 0.2 mm	Ignored
	D=(x+y)/2	0.2 mm < D ≤ 0.3 mm	N≤5
	Spots density: 10 mm	0.5mm < D	Not allowed
LCD black spots, white spots, light leakage (line Type)	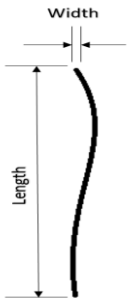	Size = 12.1”		
		Length	Width	Qualified Qty
		-	W ≤ 0.05	Ignored
		L ≤ 5.0	0.05< W ≤ 0.1	N≤3
	Spots density: 10 mm	5.0 < L	0.10< W 5.0 < L	N = 0
Bright/Dark Dots	Size = 12.1		
	Item	Qualified Qty	
	Bright dots	0	
	Dark dots	0	
	Cluster Bright Dots or Dark Dots	0	
	Total Bright and Dark Dots	0	
Clear spots	Size = 12.1”		
	Average Diameter	Qualified Qty	
	D < 0.2 mm	Ignored	
	0.2 mm < D < 0.3 mm	4	
	0.3 mm < D < 0.5 mm	2	
	0.5 mm < D	0	
	Spots density: 10 mm		

12. RELIABILITY TEST

NO.	TEST ITEM	TEST CONDITION	NOTE
1	High Temperature Storage	80°C/120 hours	Note 1
2	Low Temperature Storage	-30°C/120 hours	
3	High Temperature Operating	70 °C /120 hours	
4	Low Temperature Operating	-20°C/120 hours	
5	High Temperature and High Humidity	Humidity 40℃, 90%RH, 120Hrs	
6	Thermal Cycling Test (No operation)	-20℃ for 30min, 70℃ for 30 min. 100 cycles. Then test at room temperature after 1 hour	Note 2
7	Vibration Test	Frequency: 10 ÷ 55 Hz. Stroke: 1.5 mm. Sweep: 10Hz ÷ 55Hz ÷ 10 Hz. 2 hours for each direction of X, Y, Z (Total 6 hours)	

Note 1. Sample quantity for each test item is 5 ÷ 10 pcs.
Note 2. Before cosmetic and function test, the product must have enough recovery time, at least 2 hours at room temperature.

13. LEGAL INFORMATION

CE marking is usually obligatory only for a complete end product. Riverdi display modules are semi-finished goods which are used as inputs to become part of the finished products.

Therefore, Riverdi display modules are not CE marked.

Riverdi grants the guarantee for the proper operation of the goods for a period of 12 months from the date of possession of the goods. If in a consequence of this guaranteed execution the customer has received the defects-free item as replacement for the defective item, the effectiveness period of this guarantee shall start anew from the moment the customer receives the defects-free item.

Information about device is the property of Riverdi and may be the subject of patents pending or granted. It is not allowed to copy or disclosed this document without prior written permission.

Riverdi endeavors to ensure that all contained information in this document is correct but does not accept liability for any error or omission. Riverdi products are in developing process and published information may be not up to date. Riverdi reserves the right to update and makes changes to Specifications or written material without prior notice at any time. It is important to check the current position with Riverdi.

Images and graphics used in this document are only for illustrative the purpose. All images and graphics are possible to be displayed on the range products of Riverdi, however the quality may vary. Riverdi is no liable to the buyer or to any third party for any indirect, incidental, special, consequential, punitive, or exemplary damages (including without limitation lost profits, lost savings, or loss of business opportunity) relating to any product, service provided or to be provided by Riverdi, or the use or inability to use the same, even if Riverdi has been advised of the possibility of such damages.

Riverdi products are not fault tolerant nor designed, manufactured or intended for use or resale as on line control equipment in hazardous environments requiring fail–safe performance, such as in the operation of nuclear facilities, aircraft navigation or communication systems, air traffic control, direct life support machines or weapons systems in which the failure of the product could lead directly to death, personal injury or severe physical or environmental damage ('High-Risk Activities'). Riverdi and its suppliers specifically disclaim any expressed or implied warranty of fitness for High-Risk Activities. Using Riverdi products and devices in 'High-Risk Activities' and in any other application is entirely at the buyer's risk, and the buyer agrees to defend, indemnify, and hold harmless Riverdi from all damages, claims or expenses resulting from such use. No licenses are conveyed, implicitly or otherwise, under any Riverdi intellectual property rights.

Mouser Electronics

Authorized Distributor

Click to View Pricing, Inventory, Delivery & Lifecycle Information:

Riverdi:

RVT121HVHNWN00