THIS DRAWING IS UNPUBLISHED. RELEASED FOR PUBLICATION
© COPYRIGHT BY TYCO ELECTRONICS CORPORATION, ALL RIGHTS RESERVED.

LOC	DIST
DS	–

REVISIONS

P	LTR	DESCRIPTION	DATE	DWN	APVD
	A2	REVISED (ECR-08-030584)	23MAR.'09	OH	JK
	B	REVISED (ECR-09-018162)	18.AUG'09	OH	M.K
	C	REVISED (ECR-09-027658)	21.DEC'09	OH	M.K
	D	REVISED (ECR-10-023591)	25.OCT'10	OH	M.K

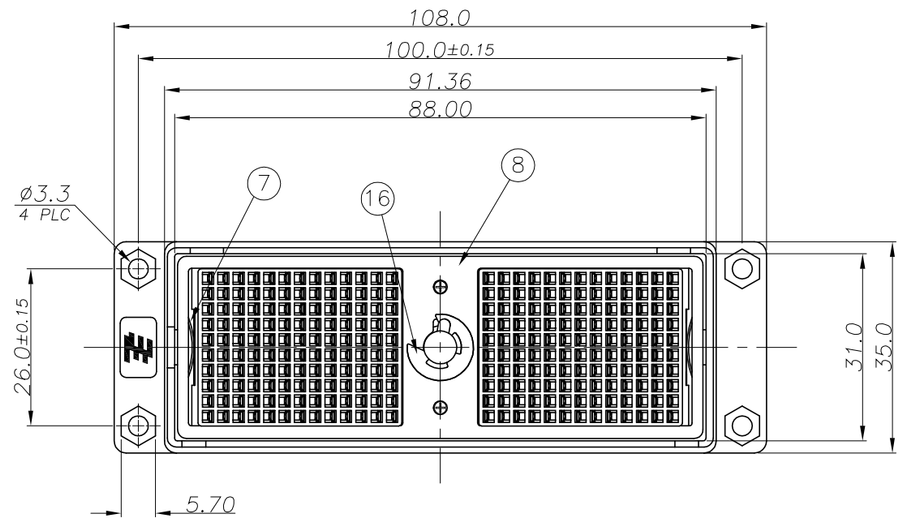

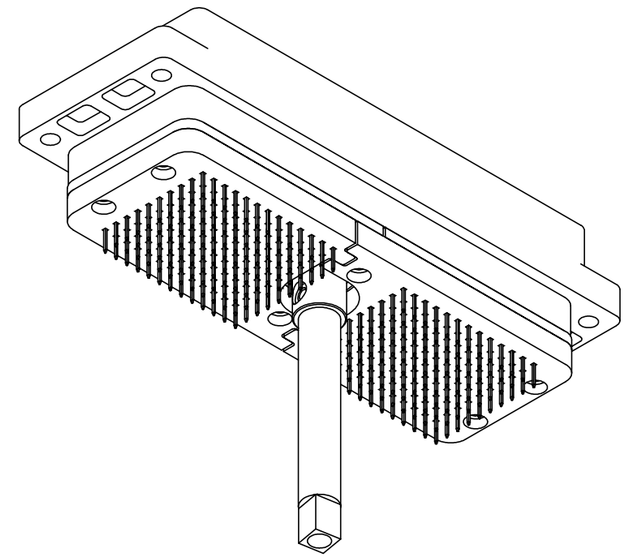

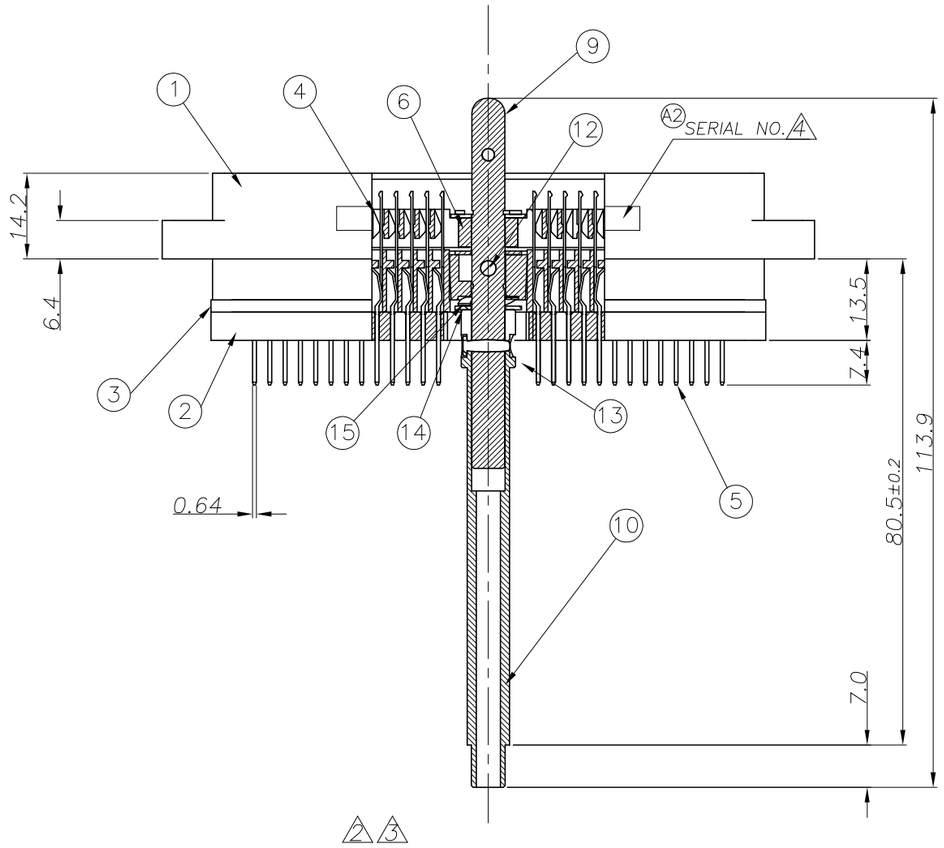

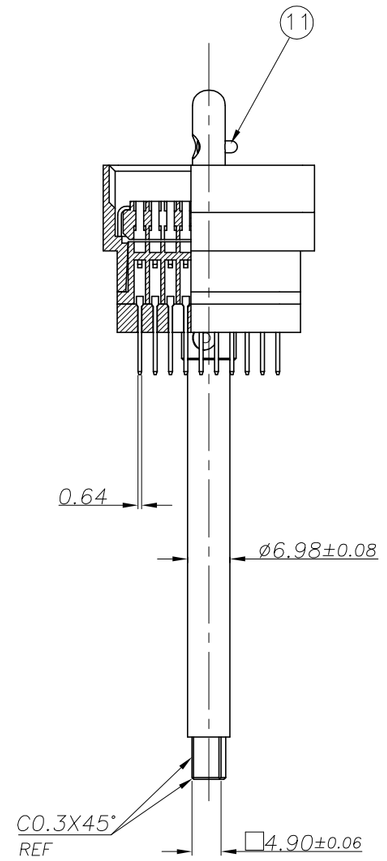

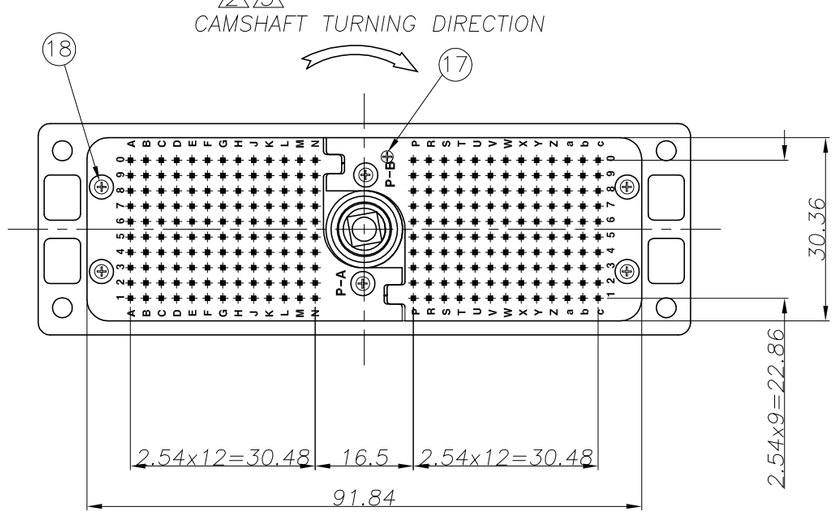

NOTE.
1. PLATING :
CONTACT AREA : 0.8um MIN. GOLD OVER 2.5um MIN. NICKEL.
OTHERS : GOLD FLASH OVER 2.5um MIN. NICKEL.
2. TORQUE : 9.5Kg·cm Max.
A1 3. CAMSHAFT TURNING ANGLE(ON LOCKING SITUATION) : 110°±5°
A2 4. SERIAL NUMBER: YYMMDD-XXXX

ITEM	DESCRIPTION	MATERIAL	FINISH	REMARK	Q'ty
18	BOLT M2x8	STAINLESS STEEL	–	–	6
17	BOLT M2x4	STAINLESS STEEL	–	–	10
16	E-RING	STAINLESS STEEL	–	–	1
15	WAVE WASHER	STAINLESS STEEL	–	–	1
14	WASHER	STAINLESS STEEL	–	–	2
13	CAM SHAFT PIN(L)	STAINLESS STEEL	–	–	1
12	CAM SHAFT PIN(M)	STAINLESS STEEL	–	–	1
11	CAM SHAFT PIN(S)	STAINLESS STEEL	–	–	1
10	CAM SHAFT BODY	STAINLESS STEEL	–	–	1
9	CAM SHAFT HEADER	STAINLESS STEEL	–	–	1
8	COVER	STAINLESS STEEL	–	–	1
7	SPRING	STAINLESS STEEL	–	–	2
6	PLUG LOCKING GUIDE	THERMOPLASTIC	–	–	2
5	TERMINAL	COPPER ALLOY	1	–	260
4	PLUG SLIDE PLATE	PPS GF30	–	UL 94V-0	2
3	PLUG HOUSING	PBT GF30	–	UL 94V-0	2
2	PIN GUIDE	PC GF30	–	UL 94V-0	2
1	PLUG DIECASTING	ALUMINUM	NICKEL PLATING	–	1

PART NO. 2005801-1
DESCRIPTION M-ZIF CONN. PLUG 260P

THIS DRAWING IS A CONTROLLED DOCUMENT FOR TYCO ELECTRONICS CORPORATION IT IS SUBJECT TO CHANGE AND THE CONTROLLING ENGINEERING ORGANIZATION SHOULD BE CONTACTED FOR THE LATEST REVISION.

DIMENSIONS: MM

TOLERANCES UNLESS OTHERWISE SPECIFIED:
0 PLC ±
1 PLC ±
2 PLC ± ±0.3
3 PLC ±
4 PLC ±
ANGLES ±

MATERIAL: SEE TABLE
FINISH: SEE TABLE

DWN: OH KWON
CHK: M.KIMURA
APVD: M.KIMURA
PRODUCT SPEC: 108-61097
APPLICATION SPEC: –
WEIGHT: –

Tyco Electronics — Tyco Electronics Kyungsan, Korea

NAME: M-ZIF CONN. PLUG 260P SOLDER TYPE

SIZE	CAGE CODE	DRAWING NO	RESTRICTED TO
A2	00779	C- 2005801	–

CUSTOMER DRAWING | SCALE 1/1 | SHEET 1 OF 1 | REV D