版数 VER.	年月日 DATE	CN NO.	変更内容 DESCRIPTION	製図 DR.	担当 CHK.	査閲 APPD.	承認 APPD.
2	30.May.2014	009317	ERROR CORRECTION ETC.	M.SAITOU	N.UCHIYAMA	———	T.KUDOU
3	30.Jun.2014	010228	CHANGE CARRIER TAPE MATERIAL, THICKNESS AND REEL DIAMETER	———	N.UCHIYAMA	———	T.KUDOU
4	15.May.2018	025148	CHANGE CARRIER TAPE MATERIAL	———	N.UCHIYAMA	———	T.KUDOU

図面番号(DRAWING NO.) SJ037739

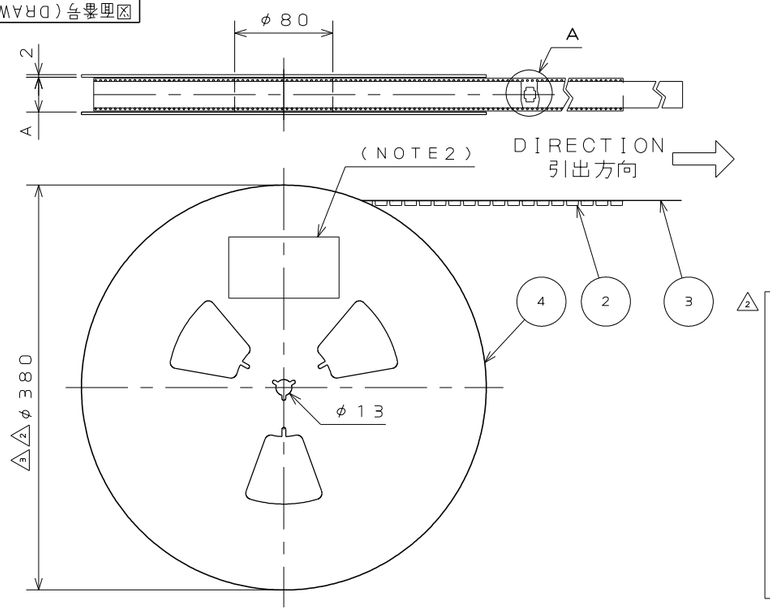

現品ラベル/ARTICLE LABEL

品名(DESCRIPTION) IL-WX-*P*-HF-HD-S-B-E1000E
図番(PART No.) SJ037739
数量(Q'ty) 1,000
ITEM NO ********
Lot No. ******-****
E.Code. TB**12

2014/01/17
MADE IN JAPAN
Japan Aviation Electronics Industry, Ltd.
QCF-C-0676(12.01)/JAPS-9006-2

DETAIL A
(SCALE 2:1)

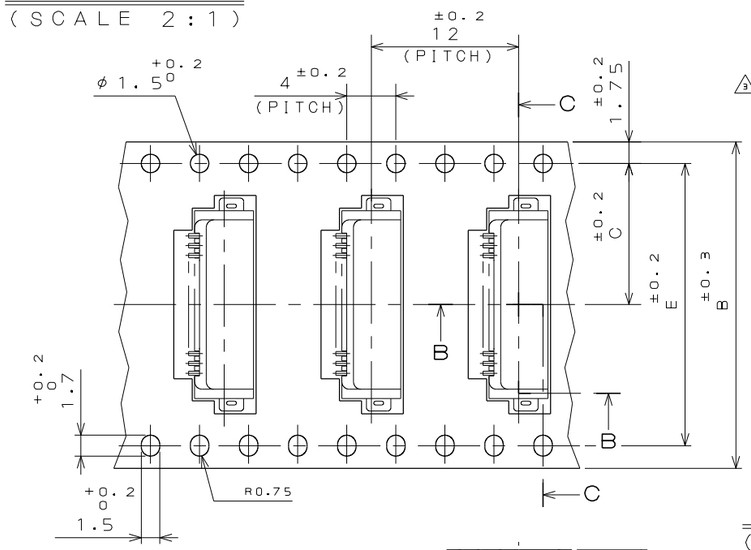

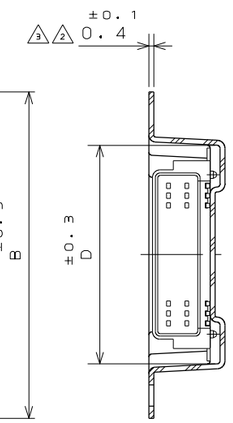

SECT. C-C
(SCALE 2:1)

SECT. B-B
(SCALE 2:1)

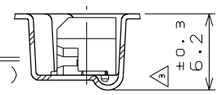

NOTE1. SUFFIX "-E1000E" OF THE PART NUMBER INDICATES THAT 1000 PCS. OF IL-WX-*P*-HF-HD-S-*E" CONNECTORS ARE ACCOMMODATED IN 1 REEL.
2. THE LABEL, IN WHITCH PART NO., NO. OF CONNECTORS. LOT NO., TAPE WIDTH AND FEED PITCH ARE MARKED IS TO BE ATTACHED ON THE MAGAZINE AS SHOWN.
3. REFER TO THE DRAWING. SJ037738 (IL-WX-*P*-HF-HD-S-*E) FOR THE DIMENSIONS OF THE CONNECTOR.
4. IN CASE THAT DIMENSIONS B(TYPE WIDTH) IS 16mm, 24mm, THERE IS PILOT HOLES AT THE ONE SIDE ONLY.

注1. "IL-WX-*P*-HF-HD-S-*-E1000E"は収納数1000個入りのリールに収納された品名を表す。
2. 図示の位置に下記のシールを貼り、品名，収納数，ロットNo.及びテープの幅と送りピッチを記入する。
3. コネクタ寸法はSJ037738(IL-WX-*P*-HF-HD-S-*E)参照。
4. B寸法(テープ幅)が16，24の場合、パイロット穴は片側のみである。

△2 TABLE 1

PART NO.	A	B	C	D	E	CARRIER TAPE MATERIAL
IL-WX- 6P*-HF-HD-S-*-E1000E	18	16	7.5	8.2	——	△3△4 POLYSTYRENE
IL-WX- 8P*-HF-HD-S-*-E1000E	18	16	7.5	9.0	——	
IL-WX-10P*-HF-HD-S-*-E1000E	18	16	7.5	9.8	——	
IL-WX-12P*-HF-HD-S-*-E1000E	18	16	7.5	10.6	——	
IL-WX-14P*-HF-HD-S-*-E1000E	26	24	11.5	11.4	——	
IL-WX-16P*-HF-HD-S-*-E1000E	26	24	11.5	12.2	——	
IL-WX-18P*-HF-HD-S-*-E1000E	26	24	11.5	13.0	——	
IL-WX-20P*-HF-HD-S-*-E1000E	26	24	11.5	13.8	——	
IL-WX-22P*-HF-HD-S-*-E1000E	26	24	11.5	14.6	——	
IL-WX-24P*-HF-HD-S-*-E1000E	26	24	11.5	15.4	——	
IL-WX-26P*-HF-HD-S-*-E1000E	26	24	11.5	16.2	——	
IL-WX-28P*-HF-HD-S-*-E1000E	26	24	11.5	17.0	——	
IL-WX-30P*-HF-HD-S-*-E1000E	26	24	11.5	17.8	——	
IL-WX-32P*-HF-HD-S-*-E1000E	26	24	11.5	18.6	——	
IL-WX-34P*-HF-HD-S-*-E1000E	34	32	14.2	19.4	28.4	
IL-WX-36P*-HF-HD-S-*-E1000E	34	32	14.2	20.2	28.4	

ENDING PORTION
終端部
W/O CONNECTOR
空部
(40mm MIN.)

W/H CONNECTOR
コネクタ装着部
(1000 PCS.)

BEGINNING PORTION (400mm MIN.)
リーダ部
W/O CONNECTOR
空部
(20mm MIN.)

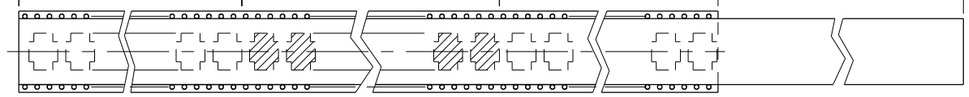

DIRECTION
引出方向

符号 NO.	名称 DESCRIPTION	個数 QTY.	材料 MATERIAL	仕上 FINISH	備考 REMARKS
4	PAPER REEL	——	PAPER	———	———
3	COVER TAPE	——	PET.	———	———
2	CARRIER TAPE	——	TABLE 1 △2	———	———
1	CONNECTOR	1000	———	———	IL-WX-*P*-HF-HD-S-*E SJ037738(NOTE3)

仕様書(SPECIFICATION) ———

第1版(ORIGINAL DATE) 3.Mar.2003

製図 DR. H.SAKURADA
担当 CHK. T.MORITAKE
査閲 APPD. ———
承認 APPD. T.MORINO

一般公差(GENERAL TOLERANCE)
寸法(DIMENSION): . ±0.8 / .X ±0.4 / .XX ±0.1 / .XXX ±
角度(ANGLES): X° ± / X°X' ±
単位(UNIT): mm

尺度(SCALE) ———
シリーズ(SERIES) IL-WX
名称(TITLE) IL-WX-*P*-HF -HD-S-B-E1000E
質量(MASS) ———

日本航空電子工業株式会社
JAPAN AVIATION ELECTRONICS INDUSTRY, LTD.

図面番号(DRAWING NO.) SJ037739
版数(VER.) 4
SIZE A3

LEAD FREE この製品は鉛フリー品です

JAE CONNECTOR DIV. PROPRIETARY.
COPYRIGHT(C) 2003, JAPAN AVIATION ELECTRONICS INDUSTRY, LTD.

JAE-CONNECTOR.COM
Reference Only

WISDOM承認 2018/05/23

DCF-C-212H(12.08)