MODEL DWG. NO.	SH	REV
722543	1	J

SPECIFICATION DATA

PARAMETER	VALUE
OUTPUT VOLTAGE	70V Pk–Pk MIN
COIL RESISTANCE	200 OHMS MAX
INDUCTANCE	85 mH MAX @ 1KHz
DIELECTRIC STRENGTH	500V RMS AT 60HZ FOR 1 MIN MAX NOT TO EXCEED 100V PER SECOND
LEAKAGE RESISTANCE	100 MEGOHMS MINIMUM
TEMPERATURE LIMITS	–100°F TO +225°F
CUSTOMER DWG NO	1680–622

NOTES:

1) TESTED AT 1000 I.P.S. WITH AN 8 PITCH GEAR AT .005 INCH CLEARANCE AND A LOAD OF 100K OHMS.
2) SEE PRODUCTION PRINT FOR APPLICABLE REVISION LETTER *.
3) CUSTOMER: WOODWARD GOVERNOR
4) POLARITY: WHEN FERROUS METAL IS INTRODUCED INTO MAGNETIC FIELD, PIN "B" WILL BE POSITIVE WITH RESPECT TO PIN "A".
5) CONNECTOR MATES WITH MS 3106A–10SL–4S
6) 100% TEST INDUCTANCE AND/OR OUTPUT IF ANY FAILURES ARE FOUND IN EITHER CHARACTERISTIC.

REVISIONS

REV.	DESCRIPTION	DATE	APPROVAL
J1	REDRAWN WITHOUT CHANGE	8/11/99	

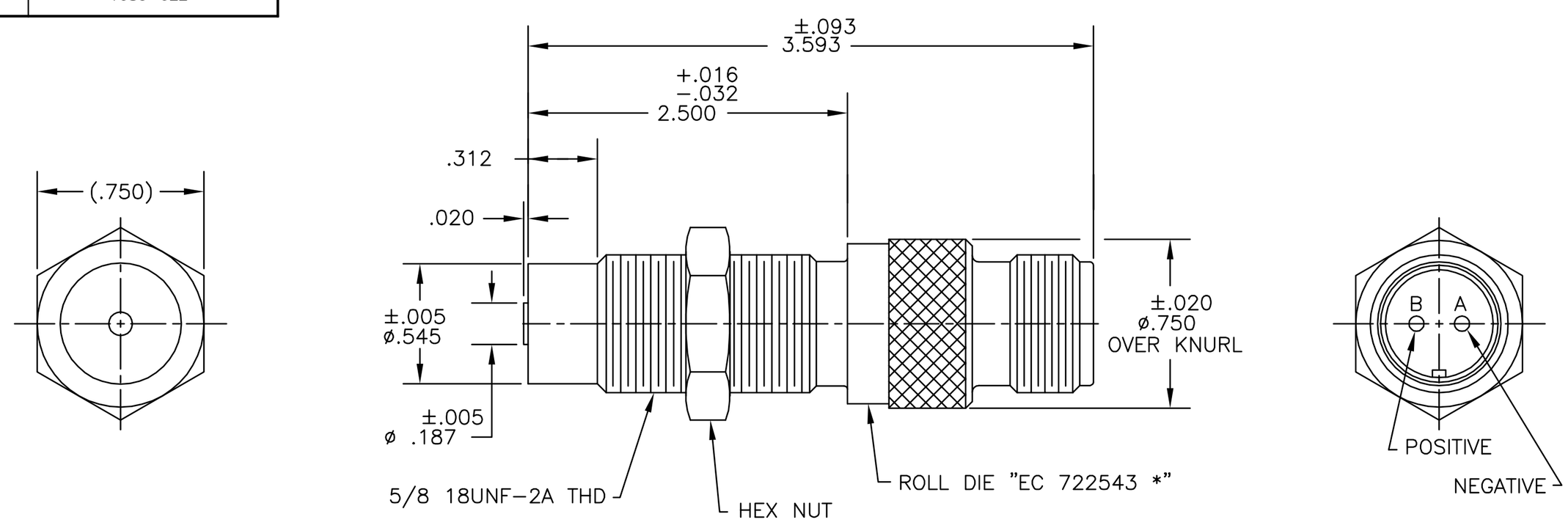

THIS IS A COMPUTER GENERATED DRAWING
MANUAL REVISIONS WILL NOT BE RECORDED

3RD ANGLE PROJECTION

UNLESS OTHERWISE SPECIFIED DIMENSIONS ARE IN INCHES
.XXX DECIMAL ± .010
.XX DECIMAL ± .03
FRACTIONS ± 1/32
ANGLES ± 5°
RUNOUT .008 FIM
125/RMS OR BETTER ON MACHINED PARTS.
BREAK SHARP CORNERS .005/.015 NO BURRS

DO NOT SCALE DRAWING

THIS DOCUMENT IS THE PROPERTY OF ELECTRO CORPORATION AND MAY NOT BE REPRODUCED EITHER IN FULL OR IN PART WITHOUT WRITTEN APPROVAL BY ELECTRO CORPORATION.

MATERIAL:
SHELL: NON–MAGNETIC SSTL

DRAWN	PURDY	10/23/84
CHKD.	DT	11/17/84
ENGR.	RAB	12/12/84
MFG.	—	—
Q.C.	EMT	12/12/84
SPEC. CONT.		

ELECTRO CORPORATION

TITLE: MAGNETIC SENSOR

SIZE B | FSCM NO. 81692 | MODEL DWG. NO. 722543 | REV J

SCALE 2:1 | DRAWING INTERPRETATION PER ANSI Y14.5M–1982 | SHEET 1 OF 1

UNCONTROLLED COPY. REVISIONS WILL NOT BE AUTOMATICALLY UPDATED. CONFIRM APPROPRIATE REVISION LEVEL WITH ELECTRO CORPORATION.