ISSUE NUMBER	
ORIGINAL	1
RoHS STATEMENT ADDED R.BLAKELY NOV 08/05	4
PCB LAYOUT PIN No. AND DIM .405(10.28) ADDED R.STA.MONICA MAY12/10	5
ADD ELECTRICAL SPECIFICATIONS R.STA.MONICA JUL.14/10	6
UPDATE METAL SHELL PROFILE (NEW TOOLING) R.STA.MONICA JUL.08/2014	7

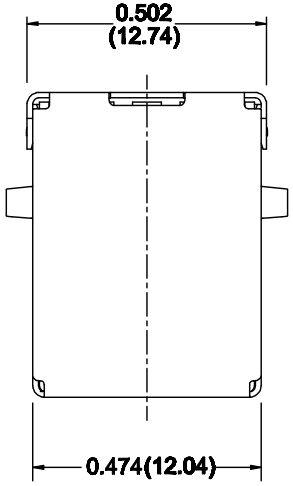

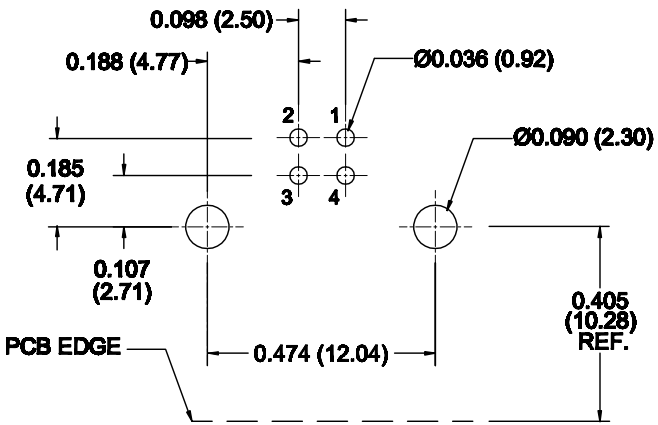

PC BOARD MOUNTING DIMENSIONS

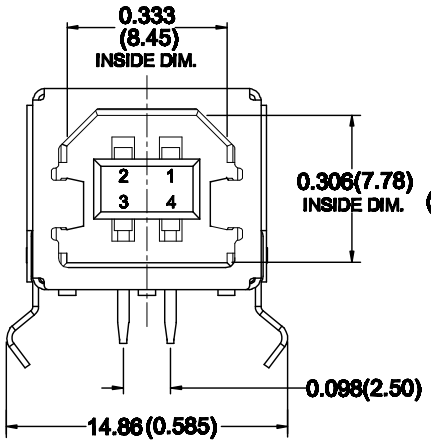

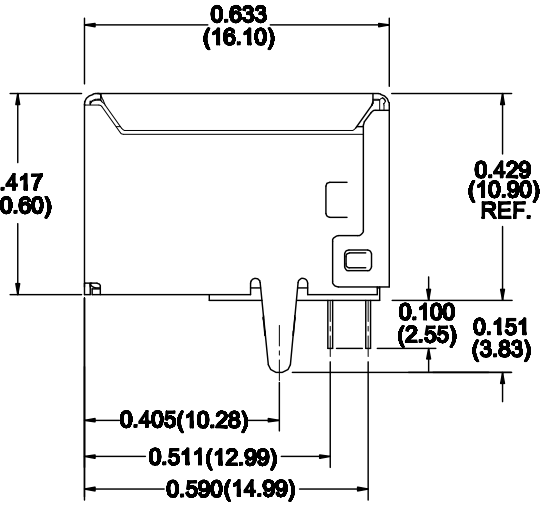

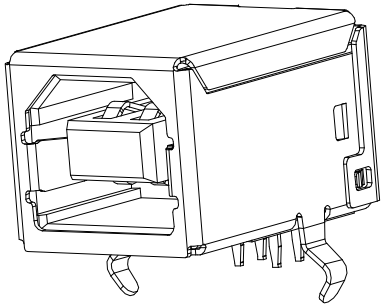

MATERIALS:

SHELL: COPPER ALLOY, NICKEL PLATED

CONTACTS: COPPER ALLOY GOLD PLATED ON CONTACT AREA
TIN ON TAIL ENDS (SEE CHART BELOW).

INSULATOR: THERMOPLASTIC

PART NUMBER: 690-004-221-023

CONTACT PLATING

- 2 GOLD FLASH
- 3 15 MICROINCHES OF GOLD
- 6 30 MICROINCHES OF GOLD

CONTACT CODE
405(10.28) FOOTPRINT

ELECTRICAL SPECIFICATIONS:

1. CURRENT RATING: 1.5A
2. CONTACT RESISTANCE: 30mΩ MAX
3. INSULATION RESISTANCE: 1000MΩ MIN
4. WITHSTANDING VOLTAGE: 500VAC FOR 1 MINUTE
5. OPERATING TEMPERATURE: 0°C TO +50°C
6. STORAGE TEMPERATURE: -20°C TO +60°C

RoHS COMPLIANT

THIS SERIES FULLY CONFORMS TO THE EUROPEAN UNION DIRECTIVES 2011/65/EU FOR RoHS COMPLIANCY.

USB CONNECTOR B TYPE, RIGHT ANGLE, SINGLE DECK

EDAC INC
TORONTO, ONTARIO
CANADA
YOUR CONNECTION TO QUALITY & SERVICE

THESE DRAWINGS AND SPECIFICATIONS ARE THE PROPERTY OF EDAC INC.,AND SHALL NOT BE REPRODUCED,OR COPIED OR USED AS THE BASIS FOR THE MANUFACTURE OR SALE OF APPARATUS WITHOUT WRITTEN PERMISSION.

ACAD REFERENCE NO.	690-004-221-023
DRAWN: F.JAWDI	DATE: AUG. 9/02
CHECKED:	DATE:
SCALE: (IN C.A.D. 1:1)	SHEET 1 OF 1
DRAWING NUMBER 690-004-221-023	ISSUE 7