D4E133-DH61-D1

AC centrifugal fan

forward-curved, dual-intake

with housing (without flange)

ebm-papst Mulfingen GmbH & Co. KG
Bachmühle 2 · D-74673 Mulfingen
Phone +49 7938 81-0
Fax +49 7938 81-110
info1@de.ebmpapst.com
www.ebmpapst.com

Limited partnership · Headquarters Mulfingen
Amtsgericht (court of registration) Stuttgart · HRA 590344

General partner Elektrobau Mulfingen GmbH · Headquarters Mulfingen
Amtsgericht (court of registration) Stuttgart · HRB 590142

Nominal data

Type	**D4E133-DH61-D1**
Motor	**M4E068-BF**

Phase		1~
Nominal voltage	VAC	230
Frequency	Hz	50
Method of obtaining data		fa
Valid for approval/standard		CE
Speed (rpm)	min^{-1}	930
Power consumption	W	80
Current draw	A	0.36
Capacitor	µF	2
Capacitor voltage	VDB	400
Capacitor standard		S2 (CE)
Min. back pressure	Pa	0
Min. back pressure	in. wg	0
Min. ambient temperature	°C	-25
Max. ambient temperature	°C	55

ml = Max. load · me = Max. efficiency · fa = Free air · cs = Customer specification · ce = Customer equipment
Subject to change

AC centrifugal fan

forward-curved, dual-intake

with housing (without flange)

Technical description

Weight	2.7 kg
Fan size	133 mm
Rotor surface	Unpainted
Impeller material	PA plastic
Housing material	Sheet steel, galvanized
Motor suspension	Motor vibration-damped on both sides
Direction of rotation	Clockwise, viewed toward rotor
Degree of protection	IP44; installation- and position-dependent
Insulation class	"B"
Moisture (F) / Environmental (H) protection class	H0 - dry environment
Max. permitted ambient temp. for motor (transport/storage)	+ 80 °C
Min. permitted ambient temp. for motor (transport/storage)	- 40 °C
Installation position	Any
Condensation drainage holes	None
Mode	S1
Motor bearing	Ball bearing
Speed levels	5
Touch current according to IEC 60990 (measuring circuit Fig. 4, TN system)	< 0.75 mA
Motor protection	Thermal overload protector (TOP) internally connected
With cable	Axial
Protection class	I (with customer connection of protective earth)
Conformity with standards	EN 60335-1; CE

ebm-papst Mulfingen GmbH & Co. KG · Bachmühle 2 · D-74673 Mulfingen · Phone +49 (0) 7938 81-0 · Fax +49 (0) 7938 81-110 · info1@de.ebmpapst.com · www.ebmpapst.com

AC centrifugal fan

forward-curved, dual-intake

with housing (without flange)

Product drawing

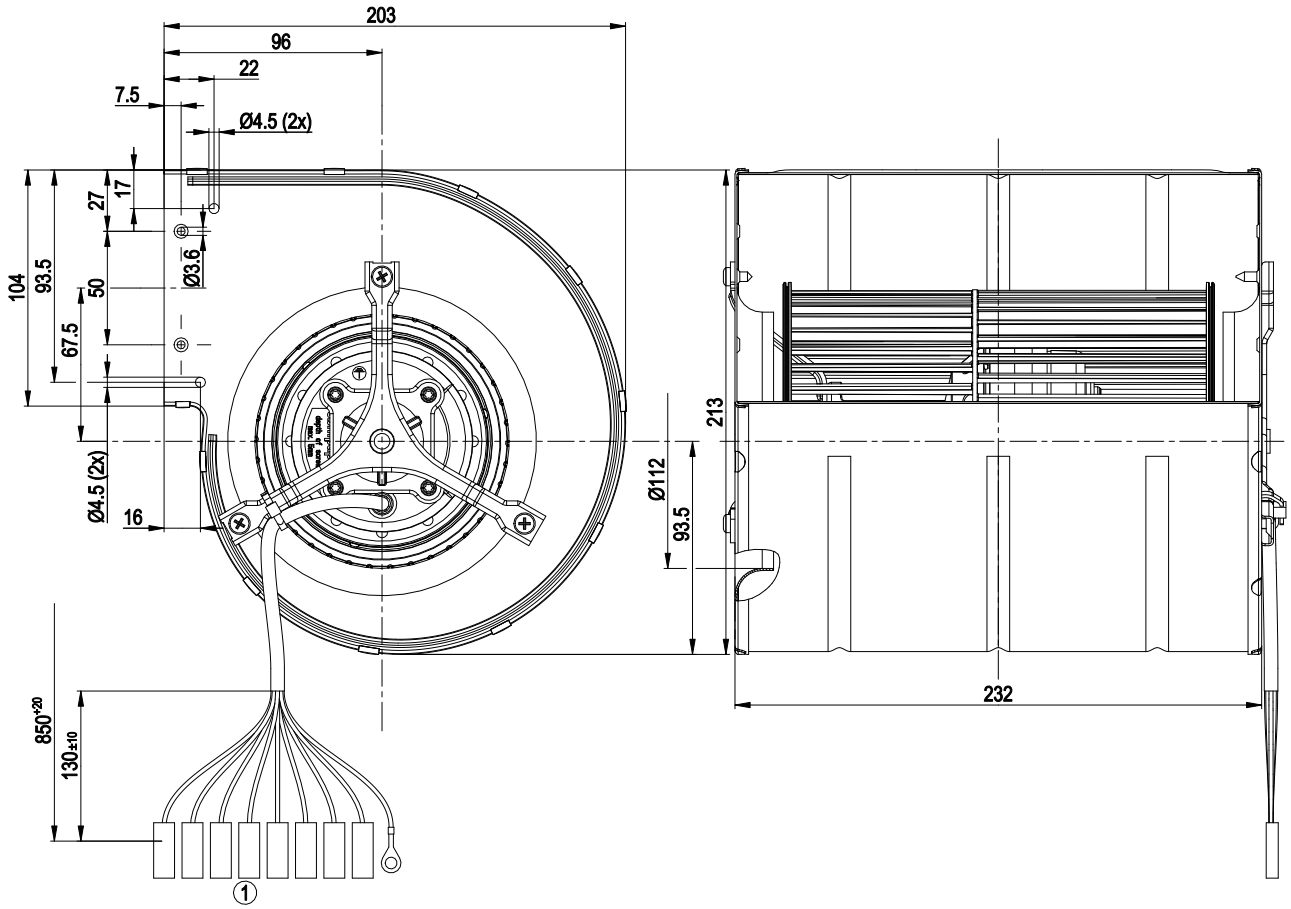

1	Cable AWG20, 8x flat push-on receptacle 6.3 x 0.8 with connector housing, 1x crimped ring terminal Ø 5.2

ebm-papst Mulfingen GmbH & Co. KG · Bachmühle 2 · D-74673 Mulfingen · Phone +49 (0) 7938 81-0 · Fax +49 (0) 7938 81-110 · info1@de.ebmpapst.com · www.ebmpapst.com

AC centrifugal fan

forward-curved, dual-intake

with housing (without flange)

Connection diagram

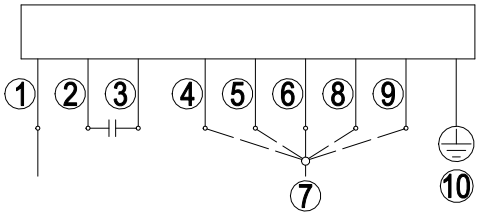

Note: High speed (step IV); low speed (step I)

1	= N = blue
2	brown
3	yellow
4	Step I black 1 / white
5	Step II black 2 / red
6	Step III black 3 / gray
7	L1
8	Step IV black 4 / orange
9	Step V black 5 / black
10	PE (green/yellow)

ebm-papst Mulfingen GmbH & Co. KG · Bachmühle 2 · D-74673 Mulfingen · Phone +49 (0) 7938 81-0 · Fax +49 (0) 7938 81-110 · info1@de.ebmpapst.com · www.ebmpapst.com

AC centrifugal fan

forward-curved, dual-intake

with housing (without flange)

Curves: Air performance 50 Hz

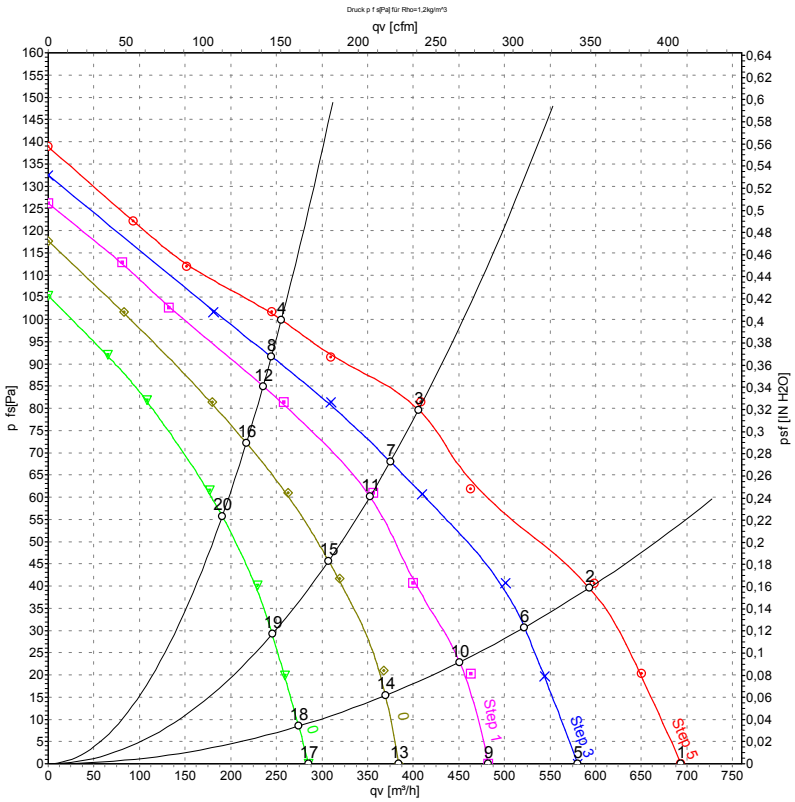

Measurement: LU-24566-1
Measurement: LU-24567-1
Measurement: LU-24568-1
Measurement: LU-24569-1
Measurement: LU-24570-1

Air performance measured according to ISO 5801 installation category A. For detailed information on the measurement setup, contact ebm-papst. Intake sound level: Sound power level according to ISO 13347 / sound pressure level measured at 1 m distance from fan axis. The values given are valid under the specified measuring conditions and may vary due to conditions of installation. For deviations from the standard configuration, the parameters have to be checked on the installed unit.

Measured values

	Stage	U	f	n	P_e	I	q_V	p_{fs}	q_V	p_{fs}
		V	Hz	min^{-1}	W	A	m^3/h	Pa	cfm	in. wg
1	5	230	50	930	80	0.36	695	0	410	0.00
2	5	230	50	1135	74	0.32	595	40	350	0.16
3	5	230	50	1270	69	0.30	405	80	240	0.32
4	5	230	50	1340	67	0.30	255	100	150	0.40
5	4	230	50	820	68	0.30	580	0	340	0.00
6	4	230	50	990	63	0.28	520	31	305	0.12
7	4	230	50	1195	57	0.25	375	68	220	0.27
8	4	230	50	1295	55	0.24	245	92	145	0.37
9	3	230	50	690	61	0.27	480	0	285	0.00
10	3	230	50	900	57	0.26	450	24	265	0.10
11	3	230	50	1115	52	0.23	350	62	205	0.25
12	3	230	50	1240	48	0.21	235	85	140	0.34
13	2	230	50	565	53	0.24	385	0	225	0.00
14	2	230	50	750	51	0.23	370	19	220	0.08
15	2	230	50	985	46	0.21	305	46	180	0.18
16	2	230	50	1150	42	0.20	215	72	130	0.29
17	1	230	50	420	46	0.21	285	0	170	0.00
18	1	230	50	545	45	0.21	275	8	160	0.03
19	1	230	50	795	42	0.20	245	29	145	0.12
20	1	230	50	1010	38	0.18	190	56	110	0.22

U = Power supply · f = Frequency · n = Speed (rpm) · P_e = Power consumption · I = Current draw · q_V = Air flow · p_{fs} = Pressure increase

ebm-papst Mulfingen GmbH & Co. KG · Bachmühle 2 · D-74673 Mulfingen · Phone +49 (0) 7938 81-0 · Fax +49 (0) 7938 81-110 · info1@de.ebmpapst.com · www.ebmpapst.com