PART NUMBER	LED COLOR(DIFFUSED)	
	POSITION 1	POSITION 2
553-0101-200F	BLANK	RED
553-0102-200F	BLANK	GREEN
553-0103-200F	BLANK	YELLOW
553-0110-200F	RED	BLANK
553-0111-200F	RED	RED
553-0112-200F	RED	GREEN
553-0113-200F	RED	YELLOW
553-0120-200F	GREEN	BLANK
553-0121-200F	GREEN	RED
553-0122-200F	GREEN	GREEN
553-0123-200F	GREEN	YELLOW
553-0128-200F	GREEN	BLUE
553-0130-200F	YELLOW	BLANK
553-0131-200F	YELLOW	RED
553-0132-200F	YELLOW	GREEN
553-0133-200F	YELLOW	YELLOW
553-0183-200F	BLUE	YELLOW
553-0188-200F	BLUE	BLUE
553-0201-200F	BLANK	RED
553-0202-200F	BLANK	GREEN
553-0203-200F	BLANK	YELLOW
553-0210-200F	RED	BLANK
553-0211-200F	RED	RED
553-0212-200F	RED	GREEN
553-0213-200F	RED	YELLOW
553-0220-200F	GREEN	BLANK
553-0222-200F	GREEN	GREEN
553-0232-200F	YELLOW	GREEN
553-0233-200F	YELLOW	YELLOW
553-0311-200F	RED	RED
553-0322-200F	GREEN	GREEN
553-0333-200F	YELLOW	YELLOW

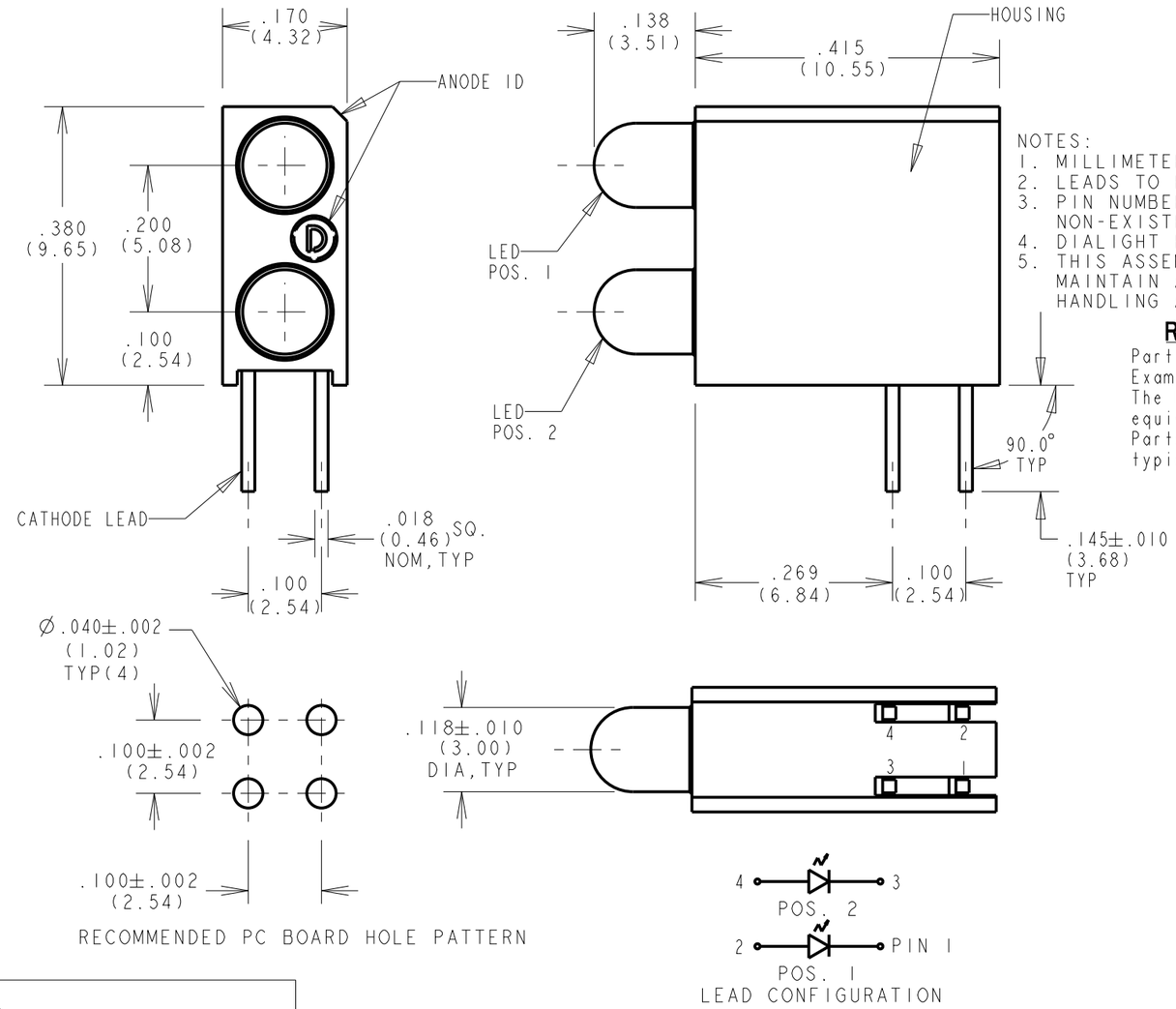

REV	ECN NO	REVISIONS	DRN	CKD	APP	DATE
A	——	NEW RELEASE	TWC	TC	N.O.	7-13-05
B	——	ADDED P/N 553-0183-200F	TWC			
C	——	ADDED SPECS OF STORAGE AND OPERATING TEMP.	VP	WFB	NO	6-3-15

NOTES:
1. MILLIMETER DIMENSIONS SHOWN FOR REFERENCE ONLY.
2. LEADS TO FIT INTO HOLES SPACED AS PER PATTERN.
3. PIN NUMBERS FOR REFERENCE ONLY, DESIGNATION NON-EXISTENT ON PART.
4. DIALIGHT PART NUMBER: 553-0XXX-200F.
5. THIS ASSEMBLY CONTAINS ELECTROSTATIC SENSITIVE DEVICES(ESDS). MAINTAIN ALL PRECAUTIONARY MEASURES DURING ASSEMBLY, HANDLING AND STORAGE IN ACCORDANCE WITH IPC-A-610.

RoHS Compliant 553-0xxx-200F Thru hole Bi-level CBI

Part Numbers with the "F" suffix ending are RoHS Compliant.
Example: 553-0101-200F, 553-0333-200F
The bag packaging is marked with "RoHS Compliant" label or equivalent markings.
Parts can be wave soldered, dip soldered or hand soldered using typical lead-free soldering process with max 260°C temp. for 5 sec.

OPERATING CHARACTERISTICS AT T =25°C

PARAMETER	COLOR	MIN	TYP	MAX	UNITS	TEST COND.
FORWARD VOLTAGE	RED		2.0	2.6	V	I_F = 10 mA
	YELLOW		2.1	2.8		
	GREEN		2.1	2.8		
	BLUE		3.5	4.2		
REVERSE VOLTAGE	ALL			5.0	V	I_R = 100µA
PEAK WAVELENGTH	RED		635		nm	MEASURED AT PEAK
	YELLOW		585			
	GREEN		565			
	BLUE		428			
LUMINIOUS INTENSITY	RED	2.5	8.7		mcd	I_F = 20 mA
	YELLOW	7.4	10.0			
	GREEN	4.7	12.6			
	BLUE	6.3		20		I_F = 10 mA
STORAGE TEMPERATURE	ALL	-55 TO +100			°C	
OPERATING TEMPERATURE	ALL	-55 TO +100				
	BLUE	-40 TO +85				

ATTENTION:
OBSERVE PRECAUTIONS FOR HANDLING ELECTROSTATIC SENSITIVE DEVICES

2 ma LOW CURRENT LED.
OPERATING CHARACTERISTICS AT 25°C AMBIENT
FOR 553-02XX-200F)

CHARACTERISTICS		MIN	TYP	MAX	UNITS	TEST COND.
LUMINOUS INTENSITY	RED	1.0	1.6		mcd	I_F = 2 mA
	YELLOW	2.3	5.0			
	GREEN	1.0	1.6			
FORWARD VOLTAGE	RED		1.7	2.2	V	I_F = 2 mA
	YELLOW		1.8	2.4		
	GREEN		1.9	2.2		
REVERSE VOLTAGE	RED			5	V	I_R = 10 µA
	GREEN			5		
	YELLOW			5		I_R = 100 µA
PEAK WAVELENGTH	RED		635		nm	MEASURED AT PEAK
	YELLOW		591			
	GREEN		565			
VIEWING ANGLE	ALL		60		Degree	
OPERATING TEMPERATURE	RED	-55 TO +100			°C	
	GREEN	-55 TO +100				
	YELLOW	-40 TO +100				
STORAGE TEMP.	ALL	-55 TO +100				

5 V., INTEGRAL RESISTOR LED
OPERATING CHARACTERISTICS AT 25°C AMBIENT
FOR 553-03XX-200F)

CHARACTERISTICS	L.E.D. COLOR	MIN	TYP	MAX	UNITS	TEST COND.
LUMINOUS INTENSITY	RED	8.7	29		mcd	V_F = 5 V
	YELLOW	3.7	12.6			
	GREEN	5.6	19			
FORWARD CURRENT	RED		10	20	mA	V_F = 5 V
	YELLOW		10	20		
	GREEN		12	20		
REVERSE VOLTAGE	ALL			5	V	I_R = 100µA
PEAK WAVELENGTH	RED		635		nm	MEASURED AT PEAK
	YELLOW		585			
	GREEN		565			
VIEWING ANGLE	ALL		60		Degree	
OPERATING TEMPERATURE	ALL	-40 TO +85			°C	
STORAGE TEMPERATURE	ALL	-55 TO +100				

THIS DRAWING AND THE CONTENTS HEREIN ARE CONFIDENTIAL AND THE SOLE PROPERTY OF DIALIGHT. REPRODUCTION OF THIS DRAWING OR CONSTRUCTION OF ANY PARTS WITHIN THIS DRAWING ARE FORBIDDEN WITHOUT THE WRITTEN CONSENT OF DIALIGHT.

SCALE: 5:1
ALL DIM'S IN: INCHES (MM)
TOLERANCES: UNLESS OTHERWISE SPECIFIED
FRACTIONS: ±1/64
DECIMALS (.XX): ±.01
DECIMALS (.XXX): ±.005
DECIMALS (.XXXX): ±.0005
ANGLES: ±1°
FINISH:
FSCM 83330

DRAWING NUMBER C-17269
REV C
TITLE CBI, 3MM BI-LEVEL , CATHODE LEFT, ROHS COMPLIANT
MATERIAL

Dialight
1501 ROUTE 34 SOUTH
FARMINGDALE, NJ 07727

SHEET 1 OF 1
FAMILY TABLE: