D

THIS DRAWING AND DESIGN HEREON CONSTITUTES A PROPRIETARY DESIGN OF PACKARD ELECTRIC DIVISION AND IS NOT TO BE DUPLICATED OR REPRODUCED WITHOUT AUTHORITY OF PACKARD ELECTRIC DIVISION.

DO NOT SCALE

PACKARD ELECTRIC DIVISION
GENERAL MOTORS CORPORATION
WARREN, OHIO

PART NO. 1208 9649

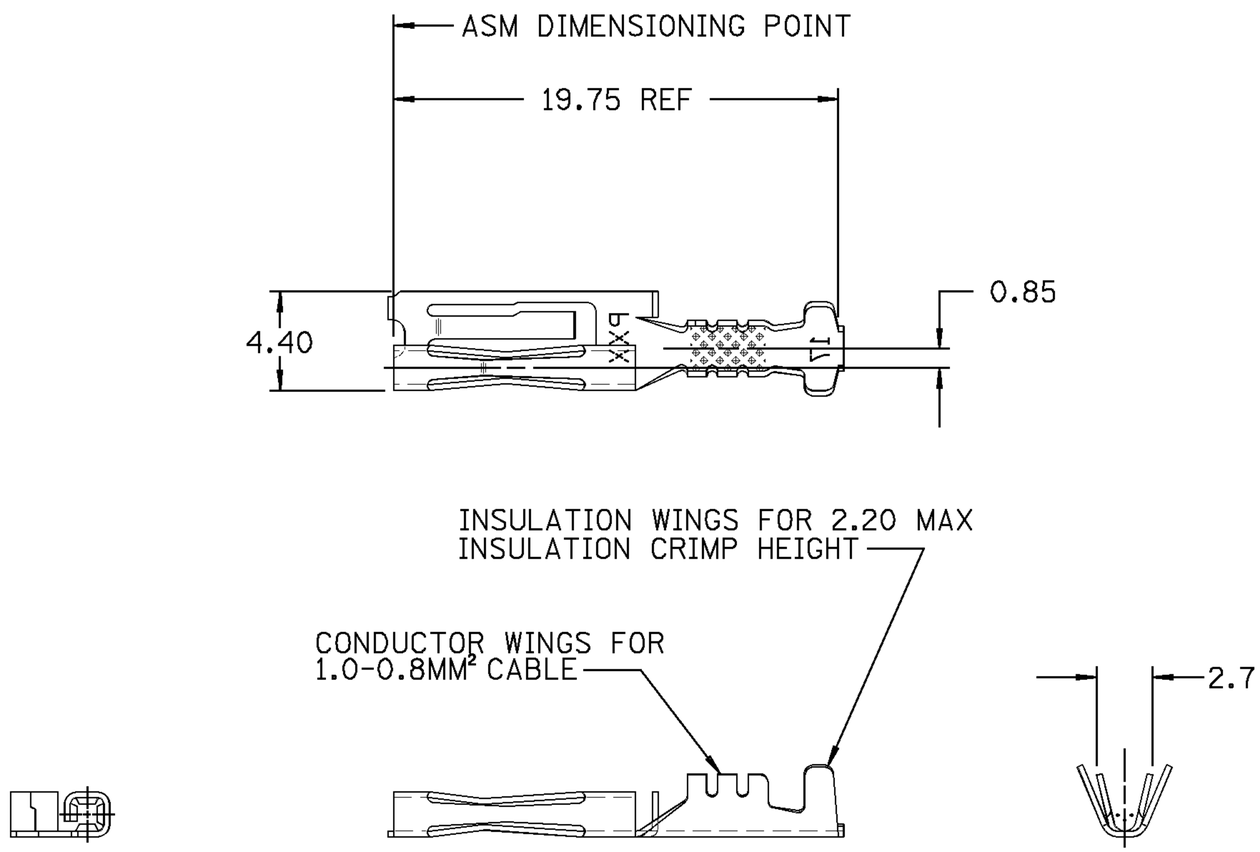

NOTES — 1. MATING PIN 12020762 OR EQUIVALENT.

2. DIMENSIONS MARKED "REF" ARE FOR REFERENCE ONLY AND NO TOLERANCE LIMITS ARE ESTABLISHED.

DATE	SYM	REVISION RECORD	AUTHORITY	DR	CK
13AP89	A	RELEASED	890005	CDH	CDH
03N089	—	REVISED GRAPHICS	131127	BDG	BDG
29MY90	—	GRAPHICS REVISED	134292	ATL	ATL
14MY91	—	REMOVED 5.00 - 2 PLCS, 4.00 - 2 PLCS,			
		CONTACT LINES A & B	142309	JK	HH
23SE91	B	2.7 WAS 2.5	144297	TLM	TLM
09DE92	-	REVISED GRAPHICS	152070	BKD	BKD
13AU12	**03**	COMPOUND MAT'L CHANGE	**419228**	**ARC**	**DAB**
24AU12	**03AA**	UPDATED PDM ATTRIBUTES	**419410**	**JLP**	**JAA**

PED/INTERGRAPH EMS

FILE SPEC: $$$$USER$$$$ DGN$SPECIFICATION$$$$$$$$$$$$ $$$$$SYTIME$$$$$$

THIRD ANGLE PROJECTION

METRIC

DIMENSIONS ARE IN MILLIMETERS UNLESS OTHERWISE SPECIFIED.

CODE NO. 6900

Q.C.

TOLERANCE UNLESS OTHERWISE SPECIFIED
DECIMAL: ONE PLACE ± 0.2, TWO PLACE ± 0.10
ANGULAR ±2°

DWG. DATE 13AP89 | SCALE NONE | DR. CRAIG D. HOOPES 13AP89

EST. NO. | CK. CRAIG D. HOOPES | DATE 13AP89

REFERENCE NO. SHEET #2 12020760 "E" SIZE | APPR. | DATE

APPR. R. KEARNS | DATE 18AP89

MATERIAL SPEC. TIN PLATED COPPER ALLOY BLEND

NAME TERM F MIC/P 100

PART NO. 1208 9649 OUTLINE DRAWING

SIZE B

PACKARD ELECTRIC