SYMBOL DEFINITION		
A DIMENSION WITHOUT AN INSPECTION REPORT SYMBOL ( ) DOES NOT REQUIRE INSPECTION. IT MAY BE CONTROLLED ON THE INDIVIDUAL COMPONENT DRAWING.	TOTAL NO OF INSPECTIONS REQUIRED	9
	LAST NO. USED	9

MISSING SYMBOLS
NO MISSING SYMBOL NUMBER

DWG STATUS DATE	STG	REV	N/P	CHG	ZONE	REVISION HISTORY	AUTH	DR	APVD 1	APVD 2
31MR97		-				ALL PARTS: WAS SEPARATE "B" SIZE & REDRAWN, NO REV UPDATE REQ'D	177526		ELO	FKV
09SE97		-				ALL PARTS: PID UPDATE, NO REV UPDATE REQ'D	181361		MRG	JVS
09SE97		-				ALL PARTS: 3.60 +0.20/-0.19 WAS 3.80 MAX NO REV UPDATE REQ'D	181386		MRG	JVS
12DE03	R	03	-	-		ALL PARTS: REVISED LOCK TANG WIDTH	250021	MJM	MJM	TM
17MY04	R	04	-	-		ALL PARTS - SHEET 3 WAS SHEET 1 OF 1	253922	CCV	FRG	WTM
150C04	R	05	-	-		12110158 - ADDED TERMINAL ID NOTE AND REMOVED PXX FROM GRAPHICS	260003	CTR	JAA	MKM
19JA06	R	06	-	-		12110158 - UPDATED PDM ATTRIBUTES	276314	JBD	JAA	WTM

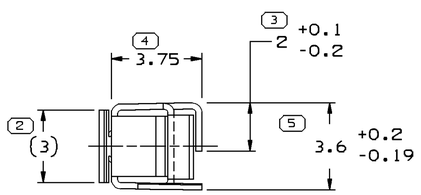

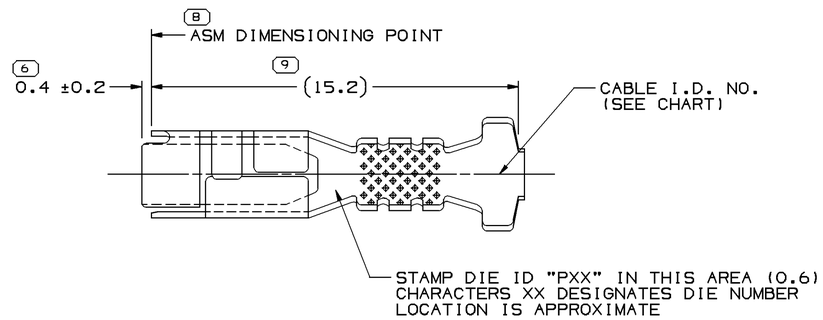

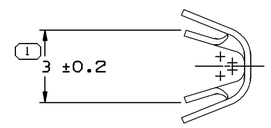

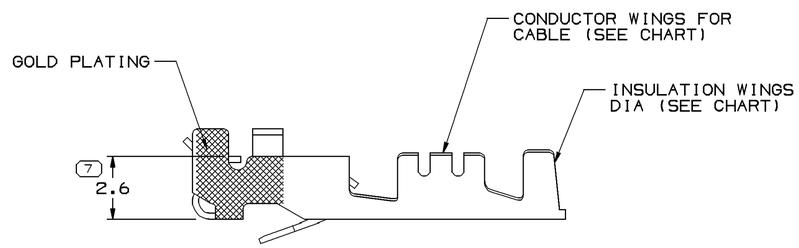

NOTES:

1. RECOMMENDED MATING BLADE - WIDTH: 2.65±0.23
   THICKNESS: 0.86/0.79
   LENGTH: 7±0.1
2. RECOMMENDED BLADE MATERIAL - MALE BLADE MATERIAL SHOULD HAVE AN ELECTRICAL CONDUCTIVITY ≥ 20% IACS AT 68°F. USE OF MATERIAL WITH CONDUCTIVITY < 20% IACS SHOULD BE APPROVED BY PACKARD ELECTRIC.
3. TERMINAL USED IN 12065454 CONNECTOR OR EQUIVALENT.
4. UNLESS OTHERWISE SPECIFIED AND/OR INDICATED:
   DIMENSIONS ARE TO FACE OF VIEW SHOWN AND AUTOMATICALLY ROUNDED BY COMPUTER FOR INSPECTION.
5. DO NOT PROBE, TEST OR OTHERWISE CONTACT THE INTERIOR REGION (THE SPRING OR ANY MOVING PART) OF THIS TERMINAL. SEVERE DAMAGE CAN OCCUR, COMPROMISING THE PERFORMANCE OF THE ELECTRICAL INTERFACE.

PLATING NOTE:

1. PART IS SELECTIVELY GOLD, NICKEL & TIN PLATED.

PART NO	REV	N/P	STATUS	MAT'L SPEC	SIZE (MM²)	I.D.	DIA
12110158	03	AC		PM003633-AN4	1-0.8-0.5	60	2.4-2.03
12084906	C	-	OBSOLETE	PM003620-AN4	1-0.8-0.5	60	2.4-2.03
PLATED					CABLE		

(N/A) PROCESS SENSITIVE DIMENSION

DIMENSIONS ENCLOSED IN ( ) INDICATE REFERENCE DIMENSIONS AND NO TOLERANCE LIMITS ARE ESTABLISHED

DIMENSIONAL RANGE (MM)		CHART D
FROM	0	>12
TO	12	
TOLERANCE UNLESS OTHERWISE SPECIFIED		
±0.1		±0.2
ANGULAR TOLERANCE ±2°		

DWG TYPE: PART DRAWING

STYLE

VOLUME (CM³)

DISTR CODE: D

UNLESS OTHERWISE SPECIFIED

THIS DOCUMENT IS IN ACCORDANCE WITH ASME Y14.5M-1994 AS AMENDED BY THE GM GLOBAL DIMENSIONING AND TOLERANCING ADDENDUM-2001. SEPARATE PATTERNS OF FEATURES MAY BE MADED SEPARATELY REGARDLESS OF DATUM REFERENCES.

ALL DIMENSIONS ARE IN MILLIMETERS

REFERENCE

THIRD ANGLE PROJECTION

DO NOT SCALE

USE MATH DATA

CAD UNIGRAPHICS

DELPHI

DELPHI PACKARD ELECTRIC SYSTEMS
WARREN, OH

		DATE
DR		
APVD1	E. LUQUENO	31MR97
APVD2	FCO. KOPCA	02AP97
APVD3	O. GALLEGOS	22AP97
APVD4		
APVD5		

SUBSTANCES OF CONCERN AND RECYCLED CONTENT PER DELPHI 10949001

MATERIAL: SEE CHART

DRAWING NAME: TAXI TERM F M/P 280.1 TANG

DRAWING NUMBER: 12059227

SIZE	SCALE	FRAME NO	SHEET NO	STG	REV	N/P
A1	8:1	1 OF 1	3 OF	R	06	-

User: gzl48
Part: 12059227-CUS01-S03
Message:
Date: 26-Jan-06 Time: 16:43