SYMBOL DEFINITION			MISSING SYMBOLS
A DIMENSION WITHOUT AN INSPECTION REPORT SYMBOL ( ) DOES NOT REQUIRE INSPECTION. IT MAY BE CONTROLLED ON THE INDIVIDUAL COMPONENT DRAWING.	TOTAL NO OF INSPECTIONS REQUIRED	9	NO MISSING SYMBOL NUMBER
	LAST NO. USED	9	

DWG STATUS					ZONE	REVISION HISTORY	AUTH	DR	APVD 1	APVD 2
DATE	STG	REV	N/P	CHG						
17MY04	R	03	-	-		ALL PARTS - CLEARED REV COL, REVISED DIMS AND REDRAWN TO PD 12160248 - OBSOLETED 12103360 & 12077939 - REVISED LOCK TANG	253922	CCV	FRG	WTM
150C04	R	04	-	-		ALL ACTIVE PARTS - ADDED TERMINAL ID NOTE	260003	RTV	JVM	MKM

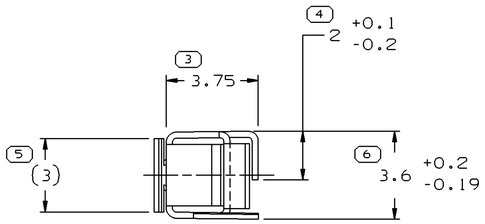

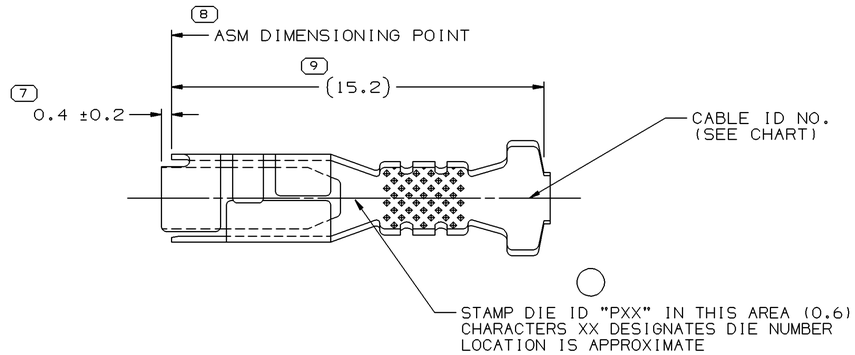

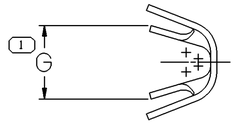

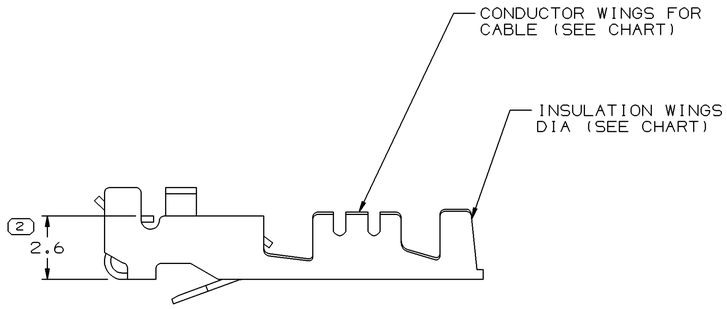

NOTES

1. RECOMMENDED MATING BLADE - WIDTH: 2.88/2.42
   THICKNESS: 0.86/0.79
   LENGTH: 7.1/6.9.

2. RECOMMENDED BLADE MATERIAL - MALE BLADE MATERIAL SHOULD HAVE AN ELECTRICAL CONDUCTIVITY ≥ 20% IACS AT 68°F. USE OF MATERIAL WITH CONDUCTIVITY < 20% IACS SHOULD BE APPROVED BY PACKARD ELECTRIC.

3. TERMINAL USED IN 12065454 CONNECTOR OR EQUIVALENT.

4. UNLESS OTHERWISE SPECIFIED AND/OR INDICATED:
   DIMENSIONS ARE TO FACE OF VIEW SHOWN AND AUTOMATICALLY ROUNDED BY COMPUTER FOR INSPECTION.

PART NO	REV	N/A	STATUS	MAT'L SPEC	SIZE (MM²)	I.D.	DIA	G
12160248	A1		OBSOLETE	PM003612-420	1-0.8-0.5	60	2.4-2.03	3±0.3
12103360	02	AA		M3604420 C65400 HD	0.5-0.35	21	2.19-1.3	2.1
12077939	04	AA		M3604420 C65400 HD	1-0.8-0.5	60	2.4-2.03	3±0.2
PLATED					CABLE			

(6) PROCESS SENSITIVE DIMENSION

DIMENSIONS ENCLOSED IN ( ) INDICATE REFERENCE DIMENSIONS AND NO TOLERANCE LIMITS ARE ESTABLISHED

DIMENSIONAL RANGE (MM)		CHART D
FROM	0	>12
TO	12	
TOLERANCE UNLESS OTHERWISE SPECIFIED		
	±0.1	±0.2
ANGULAR TOLERANCE ±2°		

DWG TYPE: PART DRAWING

STYLE

VOLUME (CM³)

DISTR CODE: D

UNLESS OTHERWISE SPECIFIED

THIS DOCUMENT IS IN ACCORDANCE WITH ASME Y14.5M-1994 AS AMENDED BY THE GM GLOBAL DIMENSIONING AND TOLERANCING ADDENDUM-2001. SEPARATE PATTERNS OF FEATURES MAY BE GAGED SEPARATELY REGARDLESS OF DATUM REFERENCES.

ALL DIMENSIONS ARE IN MILLIMETERS

REFERENCE

THIRD ANGLE PROJECTION

DO NOT SCALE

USE MATH DATA

CAD UNIGRAPHICS

DELPHI

DELPHI PACKARD ELECTRIC SYSTEMS
WARREN, OH

		DATE
DR		
APVD1	E. LUQUENO	31MR97
APVD2	FCO. KOPCA	02AP97
APVD3	O. GALLEGOS	22AP97
APVD4		
APVD5		

SUBSTANCES OF CONCERN AND RECYCLED CONTENT PER DELPHI 10949001

MATERIAL
SEE CHART

DRAWING NAME
TAXI TERM M/P 280.1

DRAWING NUMBER
12059227

SIZE	SCALE	FRAME NO	SHEET NO	STG	REV	N/P
A1	8:1	1 OF 1	2 OF	R	04	-