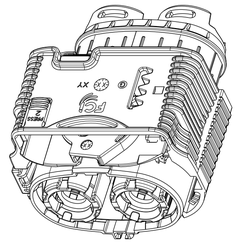

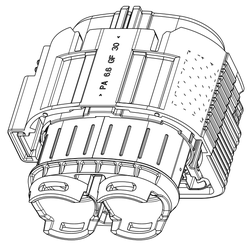

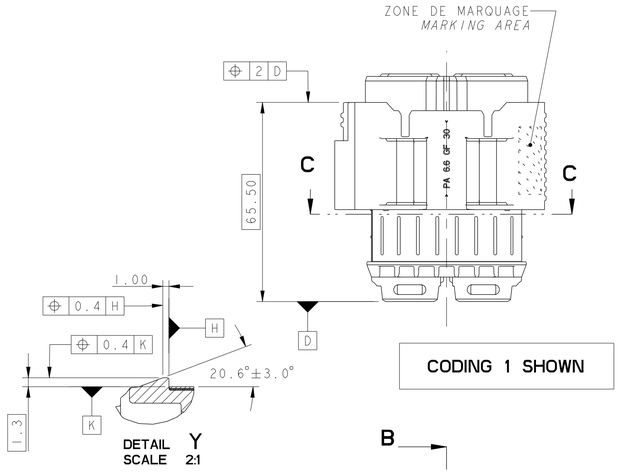

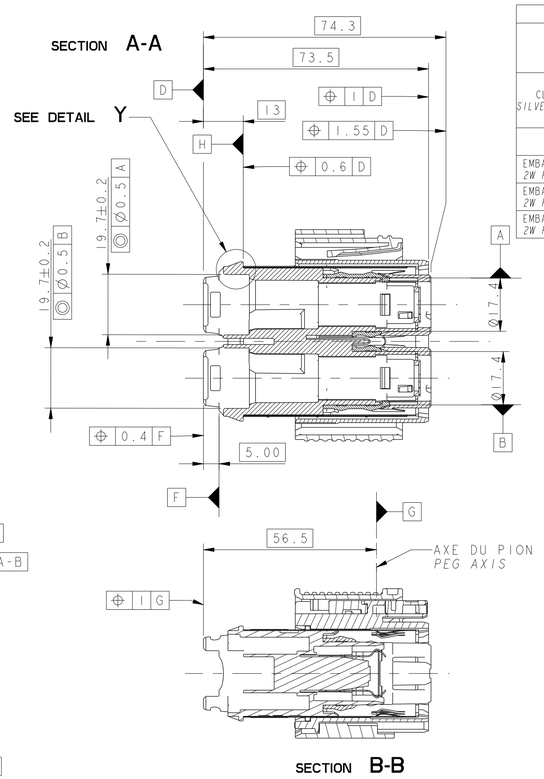

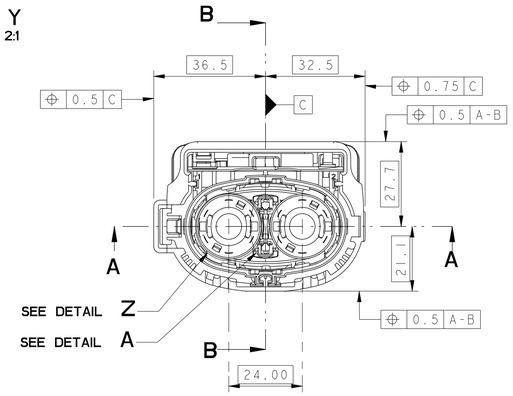

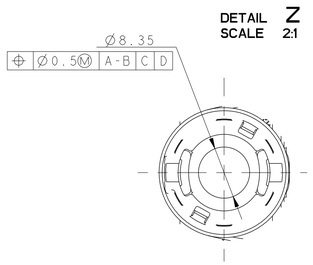

DETAIL ALVEOLE 8mm
8mm DETAIL CAVITY

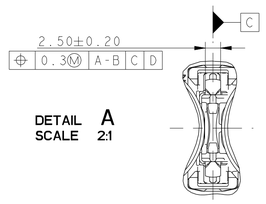

SHUNT DORE SUR SON
POINT DE CONTACT
GOLD PLATED SHORTING BAR
ON ITS CONTACT POINT

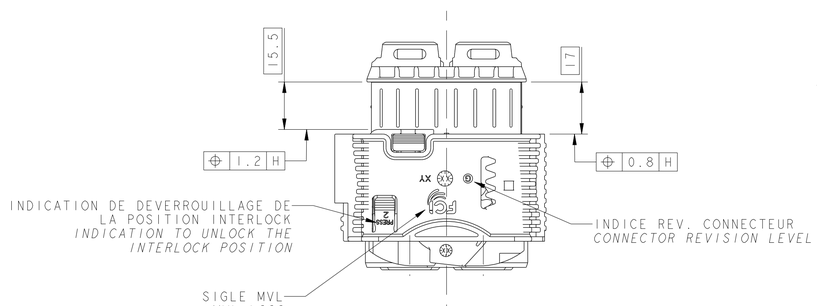

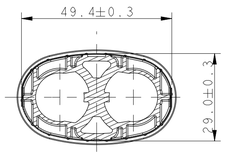

SECTION C-C
REPRISE DE BLINDAGE
BRAID SHIELDING CONTINUITY

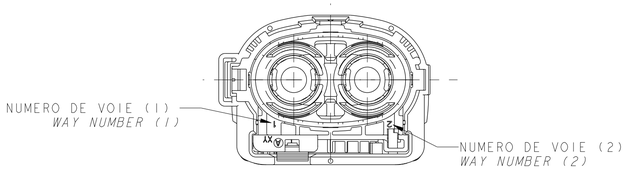

NOTE:
LA REFERENCE **C** EST DEFINIE AU MILIEU DU SEGMENT [AB] NORMALE A LA REFERENCE [A-B]
*THE REFERENCE **C** IS DEFINED IN THE MIDDLE OF THE SEGMENT [AB] NORMAL TO THE REFERENCE [A-B]*

CODAGE / KEY				
	REFERENCE MVL / *MVL PART-N°*	F673110 REVISION G	F773110 REVISION G	A DEFINIR *TO BE DEFINED*
	REFERENCE DELPHI / *DELPHI PART-N°*	13974469 REVISION 01	33511761 REVISION 01	-
	CODAGE MECANIQUE=COULEUR DE L'ETRIER *MECHANICAL KEY= SLIDER COLOR*	CODAGE 1 (NOIR) *KEY 1 (BLACK)*	CODAGE 2 (MARRON) *KEY 2 (BROWN)*	CODAGE 3 (GRIS) *KEY 3 (GREY)*
	IDENTIFIANT IMDS *IMDS ID*	212991463	213010992	A DEFINIR *TO BE DEFINED*
	SUIVANT VUE DE FACE ±0.25 ; ±2° *FOLLOWING FRONT VIEW* ±0.25 ; ±2°	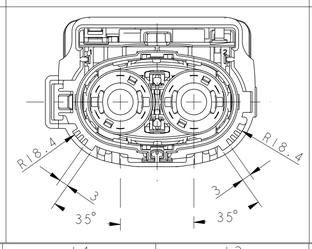	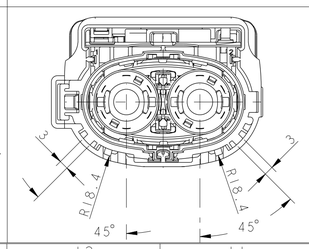	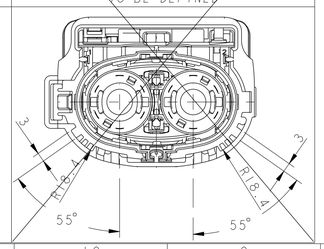

PRODUITS ASSOCIES (POUR INFORMATION) / *ASSOCIATED PARTS (FOR INFORMATION)*

	REFERENCE MVL / *MVL PART-N°*	REFERENCE DELPHI / *DELPHI PART-N°*	SECTION DU FIL / *WIRE SECTION*	DIAMETRE EXTERNE DU FIL / *EXTERNAL WIRE DIAMETER*	JUF SWS REFERENCE MVL / *MVL PART-N°*	JUF SWS REFERENCE DELPHI / *DELPHI PART-N°*	JUF SWS COULEUR / *COLOR*
CLIPS RCS800 ARGENTE / *SILVER RCS800 FEMALE TERMINAL*	F385400	13893887	35²	10 MIN - 11 MAXI	F427600	13893888	NOIR *BLACK*
			50²	11.9 MIN - 12.9 MAXI	F327600	13923559	GRIS *GREY*
GRILLE ARRIERE *SWS RETAINER*	F527600						
EMBASE 2V RCS800 V2 CODE1 *2W RCS800 V2 CODE1 HEADER*	F473110						
EMBASE 2V RCS800 V2 CODE2 *2W RCS800 V2 CODE2 HEADER*	F573110						
EMBASE 2V RCS800 V2 CODE3 *2W RCS800 V2 CODE3 HEADER*	A DEFINIR *TO BE DEFINED*						

TABLEAU DES COMPOSANTS CONSTITUANT LE PRODUIT
COMPONENTS TABLE CONSTITUTING THE PRODUCT

REPERE	DESIGNATION *TITLE*	COULEUR *COLOR*	MATIERE *MATERIAL*	QUANTITE *QUANTITY*
1	BOITIER EXTERNE *OUTER HOUSING*	ORANGE *ORANGE*	PBT 15% FV *PBT GF 15*	1
2	BOITIER INTERNE *INNER HOUSING*	ORANGE *ORANGE*	PBT 15% FV *PBT GF 15*	1
3	ETRIER *SLIDER DEVICE*		PA6.6 30% FV *PA6.6 GF 30*	1
4	CAME ROTATIVE *GEAR CAM*	NOIR *BLACK*	PA6.6 30% FV *PA6.6 GF 30*	1
5	JOINT INTERFACIAL *INTERFACIAL SEAL*	GRIS *GREY*	SILICONE LSR *LSR SILICON*	1
6	SHUNT *SHORTING BAR*	-	ACIER INOXYDABLE *STAINLESS STEEL*	1
7	CPA *CPA*	BLEU *BLUE*	PA6.6 30% FV *PA6.6 GF 30*	1
8	BLINDAGE *SHIELD PLUG*	-	ALLIAGE DE CUIVRE *COPPER ALLOY*	2
9	CAPUCHON DE PROTECTION *PROTECTIVE CAP*	NOIR *BLACK*	PA6.6 30% FV *PA6.6 GF 30*	2

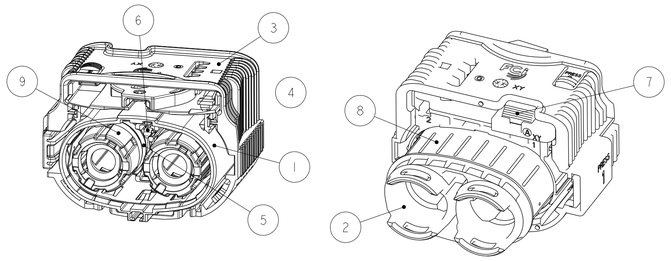

NOTAS :
1- CAHIER DES CHARGES MVL : FE PS 10 008
- CLASSE DE TEMPERATURE DU CONNECTEUR : CLASSE 3 (-40°C . +125°C)
- CLASSE DE VIBRATION :
  - PRECONDITIONNEMENT
  - VIBRATION 3x 16H (COMBINE AVEC TEMPERATURE -40°C / +125°C) ; 3.9g
- CLASSE D'ETANCHEITE :
  - 1000mb INITIAL
  - 500mb APRES LES TESTS D'ENVIRONNEMENT
- EFFORT D'ACCOUPLEMENT : F<80N
2- CONDITIONNEMENT : FE PA 10 003
3- DOSSIER DE MISE EN OEUVRE : PU138
4- MASSE DU PRODUIT : 0.097 kg ±10%
5- CE PLAN EST UN EXTRAIT DU PLAN DE DEFINITION.
ON FERA REFERENCE POUR TOUT LITIGE AUX PLANS DE DEFINITION.
6- PLAN D'EMBASE / INTERFACE: PCC0732944

NOTES:
1- MVL SPECIFICATIONS: FE PS 10 008
- *TEMPERATURE CLASS OF THE CONNECTOR : CLASS 3 (-40°C ; +125°C)*
- *VIBRATION CLASS:*
  - PRECONDITIONNING
  - *VIBRATION 3x 16H (COMBINED WITH TEMPERATURE -40°C / +125°C) ; 3.9g*
- *SEALING CLASS:*
  - 1000mb INITIAL
  - *500mb AFTER TEST ENVIRONNEMENT*
- *MATING FORCE : F<80N*
2- PACKAGING : FE PA 10 003
3- HANDLING MANUAL : PU138
4- MASS OF THE PRODUCT : 0.097 kg ±10%
5- THIS DRAWING IS AN EXTRACT OF THE DETAILS DRAWINGS.
IN CASE OF CONFLICT, REFER TO THEM.
6- HEADER / INTERFACE DRAWING: PCC0732944

ECN NO. / *NUMERO ECN*	POSITION / *POSITION*	CHANGE DESCRIPTION / *MODIFICATION*
-	-	-
	-	-
	-	-
	-	-
	-	DELPHI P/N ADDED

PRODUCT SPEC. / *SPECIF. PRODUIT*: SEE NOTES
PACKAGING SPEC. / *SPECIF. EMBALLAGE*: SEE NOTES
APPLICATION SPEC. / *SPECIF. APPLICATION*: -

COPYRIGHT DELPHI CORPORATION AND/OR ITS AFFILIATES. ALL RIGHTS RESERVED. REVISED
THIS DRAWING IS THE PROPERTY OF DELPHI CORPORATION AND CONTAINS DELPHI CONFIDENTIAL INFORMATION. THE REPRODUCTION, DISTRIBUTION AND UTILIZATION OF THIS DOCUMENT OR ITS RELATED CAD MODEL DATA, AS WELL AS COMMUNICATION OF ANY CONTENT TO OTHERS, WITHOUT EXPRESS AUTHORIZATION, IS PROHIBITED.
CE PLAN EST LA PROPRIETE DE DELPHI CORPORATION ET CONTIENT DES INFORMATIONS DELPHI CONFIDENTIELLES. LA REPRODUCTION, LA DISTRIBUTION ET L'UTILISATION DE CE DOCUMENT OU DE SES DONNEES ANTERIEURES CAD, AINSI QUE LA COMMUNICATION DE TOUT CONTENU A AUTRUI, SANS AUTORISATION EXPRESSE, EST INTERDITE.

TOLERANCES / *TOLERANCES*: ±0.2 ; ±2°
MATERIAL : / *MATIERE :*: SEE BOM
SURFACE FINISH / *ETAT DE SURFACE*: -
COUNTERPART N° / *CONTRE PARTIE N°*: SEE NOTE
COLOUR : / *COULEUR :*: SEE BOM
DO NOT MEASURE DRAWING / *NE PAS PRENDRE DE COTES*
TOOL NO. / *OUTIL N°*: -
ECO Lev. Code / *CODE B.E.*: FE
CAD SYSTEM: DELPHI PACKARD ELECTRICAL/ELECTRONIC ARCHITECTURE EPERNON, FRANCE
pro / eng. FORMAT: A1
DWG SIZE
ISO PROJECTION / *PROJECTION ISO*
DIMENSION IN MILLIMETERS / *DIMENSIONS EN MILLIMETRES*

	DATE / *DATE*	NAME / *NOM*
CREATED BY / *CREE PAR*	2011/03/24	Jean FABRE
MODIFIED BY / *MODIF. PAR*	2013/05/15	F FAURIE
CHECKED BY / *VERIF. PAR*	2013/05/28	S LACOTE
APPROVED BY / *APPR. PAR*	2013/06/10	Pascal MENARD

TITLE / *DESIGNATION*: **2W POWER RCS800 PLUG V2**
PROJECT / *PROJET*: **2W POWER RCS800 V2**
ESR NO. / *NUMERO ESR*: EU-075587
CAT. NO. / *NUMERO CAT*: -
FILE NAME / *NOM DE FICHIER*: PCC0732943
DOCUMENT UNDER PDS CONTROL / *DOCUMENT GERE SOUS P.D.S.*
NO MODIFICATION ALLOWED OUTSIDE / *PAS DE MODIFICATION EN DEHORS*

DRAWING NUMBER / *REF. PLAN*: **PCC0732943**
REV. / *IND.*: **C**
STATE / *ETAT*: **SERIAL RELEASED**
PART NUMBER / *REF. ARTICLE*: **See Table**
REV. / *IND.*: -
APPROVAL LEVEL / *NIV D'APPROBATION*: -
SHEET / *FEUILLE*: 1 of 1 / *sur* 1
SCALE / *ECH.*: 1:1

EUR C04 112 F29