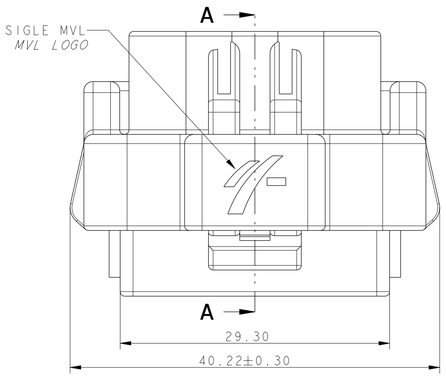

COUPE A-A

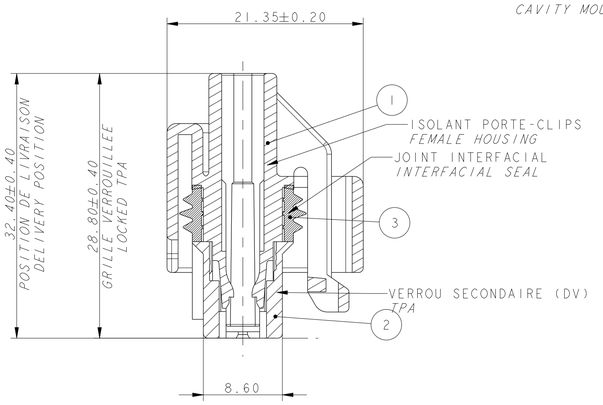

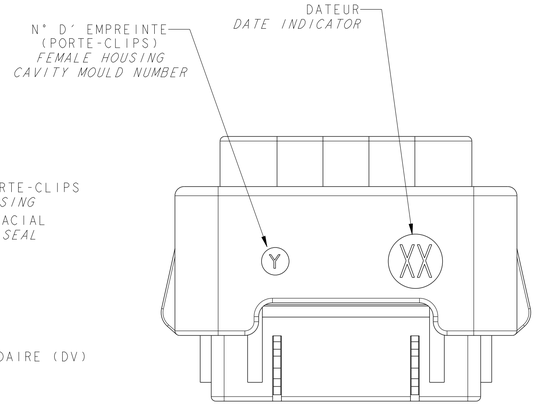

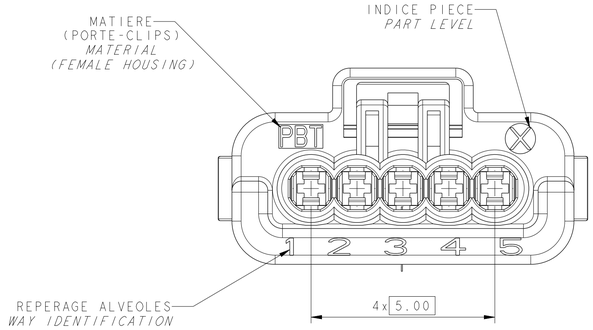

REP	DESIGNATION	REFERENCE MVL	MATIERE / *MATERIAL*	COULEUR / *COLOR*
1	ISOLANT VOIE CENTRALE BOUCHEE *FEMALE HOUSING CENTRAL WAY PLUGGED*	211 1 0 046	PBT 0% GF	NOIR / *BLACK*
	ISOLANT 5 VOIES *FEMALE HOUSING 5 WAY*	211 1 8 043	PBT 0% GF	GRIS / *GREY*
2	VERROU SECONDAIRE (DV) *TPA*	211 M 3 078	PBT 15% GF	ORANGE
		211 M 6 078	PBT 15% GF	BLEU / *BLUE*
		211 M 4 078	PBT 15% GF	JAUNE / *YELLOW*
3	JOINT INTERFACIAL *INTERFACIAL SEAL*	211 M 077	SILICONE 4 % HUILE *SILICONE 4% oil* DURETE 30±5 SHORE A *TOUGHNESS 30±5 SHORE A*	BLEU / *BLUE*
	BOUCHON *BLIND PLUG*	F 310 100	SILICONE NON LUBRIFIE *SILICONE WITHOUT OIL*	ORANGE

DESIGNATION	REF MVL	INDICE PIECE *PART LEVEL*	REF DELPHI	INDICE PIECE *PART LEVEL*	COULEUR ISOLANT *HOUSING COLOR*	CODAGE *CODING*	COULEUR DV *TPA COLOR*	N°CODEUR *CODING N°*	CODAGE COULEUR CODING COLOR vue de face ± 0.05 Selon NFR 13-460
PORT-CLIPS 5 VOIES *FEMALE SEALED CONNECTOR*	211 PC 05 3 S 4 026	A	10812038	02	GRIS *GREY*	JAUNE *YELLOW*	JAUNE *YELLOW*	1	10.70 / 9.10
	211 PC 05 3 S 6 026	A	33500706	01		BLEU *BLUE*	BLEU *BLUE*	2	11.60 / 4.05
	211 PC 05 3 S 3 026	A	33500309	01		ORANGE	ORANGE	3	13.20 / 2.45
PORTE-CLIPS VOIE CENTRALE BOUCHEE *FEMALE SEALED CONNECTOR CENTRAL WAY PLUGGED*	211 PC 05 3 S 4 030	A	10763118	02	NOIR BLACK	JAUNE *YELLOW*	JAUNE *YELLLOW*	1	10.70 / 9.10
	211 PC 05 3 S 6 030	A	33511061	01		BLEU *BLUE*	BLEU *BLUE*	2	11.60 / 4.05
	211 PC 05 3 S 3 030	A	33500310	01		ORANGE	ORANGE	3	13.20 / 2.45

ECHELLE 1:1

-	-	-
	-	-
	-	-
	-	-
	-	-
	-	INITIAL RELEASE

ECN-NO. *NUMERO ECN*	POSITION *POSITION*	CHANGE DESCRIPTION *MODIFICATION*

PRODUCT SPEC. *SPECIF. PRODUIT* - | PACKAGING SPEC. *SPECIF. EMBALAGE* - | APPLICATION SPEC. *SPECIF. APPLICATION* -

COPYRIGHT DELPHI CORPORATION AND/OR ITS AFFILIATES. ALL RIGHTS RESERVED. REVISED
THIS DRAWING IS THE PROPERTY OF DELPHI CORPORATION AND CONTAINS DELPHI CONFIDENTIAL INFORMATION. THE REPRODUCTION, DISTRIBUTION AND UTILIZATION OF THIS DOCUMENT OR ITS RELATED CAD MATA DATA, AS WELL AS COMMUNICATION OF ANY CONTENT TO OTHERS, WITHOUT EXPRESS AUTHORIZATION, IS PROHIBITED.
CE PLAN EST LA PROPRIETE DE DELPHI CORPORATION ET CONTIENT DES INFORMATIONS DELPHI CONFIDENTIELLES. LA REPRODUCTION, LA DISTRIBUTION ET L'UTILISATION DE CE DOCUMENT OU DE SES DONNEES MATHEMATIQUES CAD, AINSI QUE LA COMMUNICATION DE TOUT CONTENU A AUTRUI, SANS AUTORISATION EXPRESSE, EST INTERDITE.

TOLERANCES *TOLERANCES* ±0.1 ±2° | MATERIAL : *MATIERE :* SEE TABLE | SURFACE FINISH *ETAT DE SURFACE* -

COUNTERPART N° *CONTE-PARTIE N°* - | COLOUR *COULEUR :* SEE TABLE | -

DO NOT MEASURE DRAWING *NE PAS PRENDRE DE COTES* | TOOL NO. *Outil N°* - | ECO Loc. Code *CODE B.E.* FE

DELPHI
DELPHI PACKARD ELECTRICAL/ELECTRONIC ARCHITECTURE
EPERNON, FRANCE

CAD SYSTEM: pro / eng.
ISO PROJECTION *PROJECTION ISO*
DIMENSION IN MILLIMETERS *DIMENSIONS EN MILLIMETRES*
DWG SIZE *FORMAT*: A1

	DATE *DATE*	NAME *NOM*
CREATED BY *CREE PAR*	1998-10-26	F.FAURIE
MODIFIED BY *MODIF. PAR*	2013/07/11	F.FAURIE
CHECKED BY *VERIF. PAR*	2013/09/18	S.LACOTE
APPROVED BY *APPR. PAR*	2013/09/19	Pascal MENARD

TITLE *DESIGNATION*: 2.8 S.W.S. 5-W FEMALE HOUSING

PROJECT *PROJET*: MINI SEALED FAMILY

ESR NO. *NUMERO ESR*: FRA-0702 | CAT. NO. *NUMERO CAT.*: -

DRAWING NUMBER *REF. PLAN*: PCC0828888 | REV. *IND.*: A

STATE *ETAT*: SERIAL RELEASED

PART NUMBER *REF. ARTICLE*: See Table | REV. *IND.*: -

FILE NAME *NOM DE FICHIER*: PCC0828888

DOCUMENT UNDER POS CONTROL *DOCUMENT GERE SOUS P.O.S.*
NO MODIFICATION ALLOWED OUTSIDE *PAS DE MODIFICATION EN DEHORS*

APPROVAL LEVEL *NIV. D'APPROBATION*: -
SHEET *FEUILLE*: 1 of / sur 1
SCALE *ECH.*: 3:1

EUR C04 1/2 F29