NOTA NOTE	SPECIFICATION
1	DATEUR Ø4 EN RELIEF
	Ø4 RAISED DATE MARKER
2	MARQUAGE MATIERE EN FLASH-MARQUAGE
	MATERIAL MARKER IN FLASH-MARKING
3	SIGLE DELPHI OPTIONNEL EN FLASH-MARQUAGE EN RELIEF DE 0.05 MAX
	FLASH MARKING DELPHI OPTIONAL LOGO OF RELIEF 0.05 MAX
4	REPERAGE ALVEOLES EN RELIEF
	RAISED LOCATING CAVITY
5	SIGLE MVL OPTIONNEL EN FLASH-MARQUAGE
	FLASH-MARKING MVL OPTIONAL LOGO
6	REPERAGE INDICE EN RELIEF
	RAISED INDEX LOCATING
7	NUMERO D'EMPREINTE EN RELIEF
	RAISED PRINT NUMBER
8	COTE D'ENCOMBREMENT MAXI DU RESSORT A L'ACCOUPLEMENT DU PORTE-CLIPS
	MAXIMUM OVERALL DIMENSION OF THE SPRING WHEN MATTING FEMALE-HOUSING
9	LE RESSORT NE DOIT PAS SORTIR DE L'ENCOMBREMENT DU PORTE -CLIPS
	THE SPRING DO NOT HAVE EXCEED THE OVERALL DIMENSIONS OF THE FEMALE HOUSING
10	POSITION LIMITE DU JOINT
	LIMIT POSITION OF THE SEAL
11	REF. MVL/*MVL. NUMBER*
12	P.M.:POUR MEMOIRE/*FOR MEMORY*

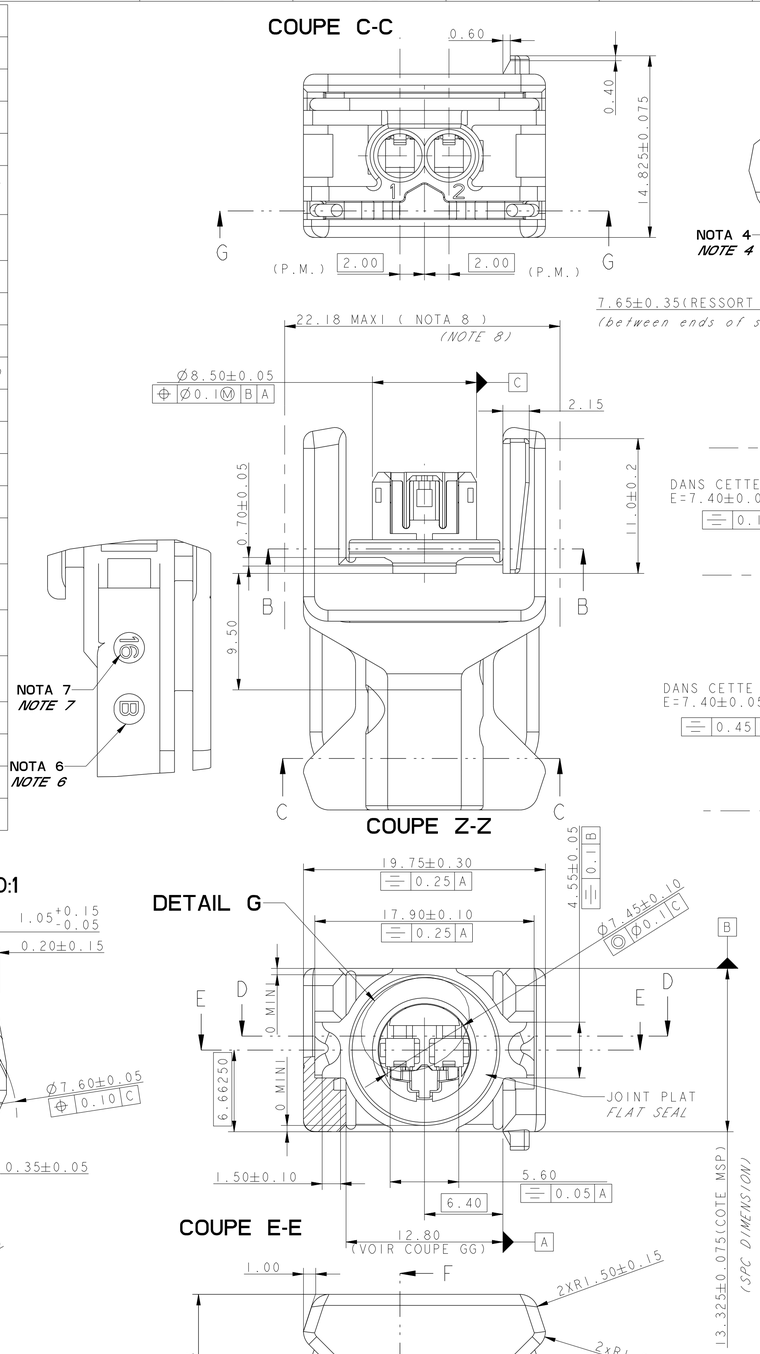

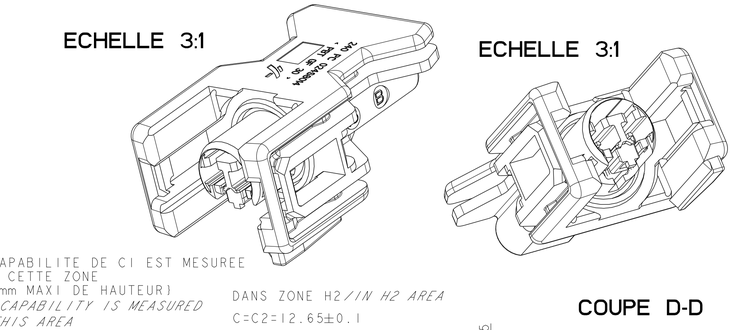

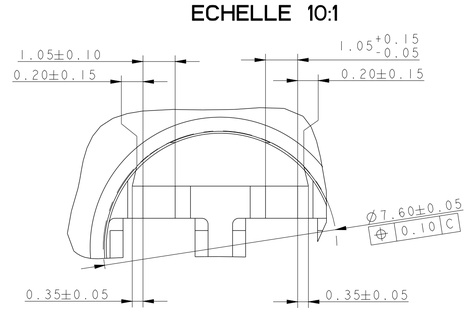

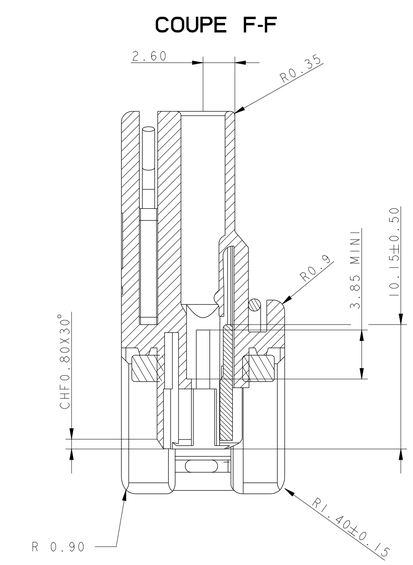

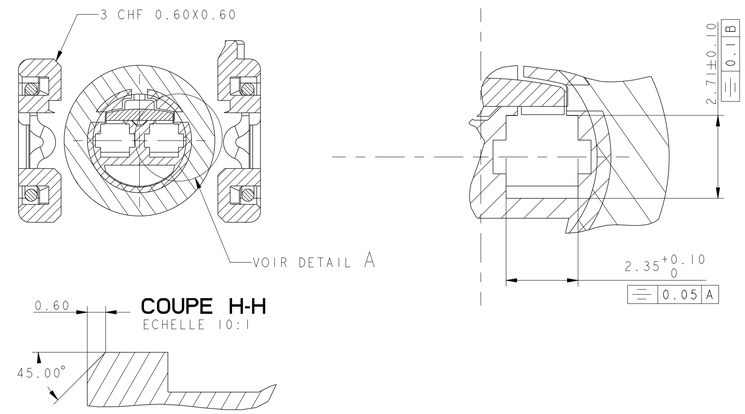

DESIGNATION	MVL		DELPHI	
	REFERENCE	REVISION	REFERENCE	REVISION
PORTE-CLIPS EQUIPE PHASE 2.7 / PHASE 2.7 EQUIPED FEMALE-HOUSING	240 PC 02 4S 8014	B	10811963	01

DESIGNATION	REF MVL	MATIERE	COULEUR
PORTE-CLIPS/FEMALE-HOUSING 2V PHASE 2.7 DCS-2 1,5x0,6	240 1 8011	PBT GF 30	GRIS/*GREY*
JOINT PLAT/FLAT SEAL	240 M 2008	SILICONE FLUORE	ROUGE/*RED*
GRILLE PORTE-CLIPS / MALE HOUSING GRID	240 M 4030	PBT GF 30	JAUNE/*YELLOW*
RESSORT/SPRING	240 X 0009	INOX	GRIS/*GREY*

ECN NO. / NUMERO ECN	POSITION / POSITION	CHANGE DESCRIPTION / MODIFICATION
-	-	-
-	-	-
-	-	-
-	-	-
-	-	-
-	-	DELPHI P/N ADDED

PRODUCT SPEC. / SPECIF. PRODUIT: -
PACKAGING SPEC. / SPECIF. EMBALAGE: -
APPLICATION SPEC. / SPECIF. APPLICATION: -

COPYRIGHT DELPHI CORPORATION AND/OR ITS AFFILIATES. ALL RIGHTS RESERVED. REVISED
THIS DRAWING IS THE PROPERTY OF DELPHI CORPORATION AND CONTAINS DELPHI CONFIDENTIAL INFORMATION. THE REPRODUCTION, DISTRIBUTION AND UTILIZATION OF THIS DOCUMENT OR ITS RELATED CAD MATH DATA, AS WELL AS COMMUNICATION OF ANY CONTENT TO OTHERS, WITHOUT EXPRESS AUTHORIZATION, IS PROHIBITED.
CE PLAN EST LA PROPRIETE DE DELPHI CORPORATION ET CONTIENT DES INFORMATIONS DELPHI CONFIDENTIELLES. LA REPRODUCTION, LA DISTRIBUTION ET L'UTILISATION DE CE DOCUMENT OU DE SES DONNEES MATHEMATIQUES CAO, AINSI QUE LA COMMUNICATION DE TOUT CONTENU A AUTRUI, SANS AUTORISATION EXPRESSE, EST INTERDITE.

TOLERANCES / TOLERANCES: ±0.1 ±2°
CONFIDENTIAL N° / CONFIDENTIAL N°: -
DO NOT MEASURE DRAWING / NE PAS PRENDRE DE COTES
MATERIAL / MATIERE: -
COLOUR / COULEUR: -
TOOL NO. / OUTIL N°: -
SURFACE FINISH / ETAT DE SURFACE: -
ECO Loc. Code / CODE B.E.: FE

	DATE / DATE	NAME / NOM
CREATED BY / CREE PAR	19990617	BX
MODIFIED BY / MODIF. PAR	2013/1004	F FAURIE
CHECKED BY / VERIF. PAR	2013/1018	S LACOTE
APPROVED BY / APPR. PAR	2013/1018	Pascal MENARD

TITLE / DESIGNATION: FEMALE HOUSING VERSION 2.7
PROJECT / PROJET: INJECTOR DCS-2 1.5X0.6
ESR NO. / NUMERO ESR: FRA-0856
CAT. NO. / NUMERO CAT.: 240 PC 024 S 8014
DOCUMENT UNDER PDS CONTROL / DOCUMENT GERE SOUS P.D.S.
NO MODIFICATION ALLOWED OUTSIDE / PAS DE MODIFICATION EN DEHORS
FILE NAME / NOM DE FICHIER: 240FT0087

DELPHI — DELPHI PACKARD ELECTRICAL/ELECTRONIC ARCHITECTURE, EPERNON, FRANCE
ISO PROJECTION / PROJECTION ISO
DIMENSION IN MILLIMETERS / DIMENSIONS EN MILLIMETRES
DRAWING NUMBER / REF. PLAN: 240FT0087
REV. / IND.: C
STATE / ETAT: SERIAL RELEASED
PART NUMBER / REF. ARTICLE: 240PC024S8014
REV. / IND.: B
CAD SYSTEM: pro / eng.
DWG SIZE / FORMAT: A1
APPROVAL LEVEL / NIV. D'APPROBATION: A
SHEET / FEUILLE: 1 of / sur 1
SCALE / ECH.: 4:1

Ref. modele 3D CAO: 240PC024S8014

EIR C04 112 F29