SYMBOL DEFINITION			MISSING SYMBOLS
A DIMENSION WITHOUT AN INSPECTION REPORT SYMBOL ( ) DOES NOT REQUIRE INSPECTION. IT MAY BE CONTROLLED ON THE INDIVIDUAL COMPONENT DRAWING.	TOTAL NO OF INSPECTIONS REQUIRED	14	NO MISSING SYMBOL NUMBER
	LAST NO. USED	11	

DWG STATUS					ZONE	REVISION HISTORY	AUTH	DR	APVD 1	APVD 2
DATE	STG	REV	N/P	CHG						
22MR01	R	A2	-	-		REDRAWN TO PD, DELPHI STAMP WAS PED & ADDED OPTIONAL CONSTRUCTION	205951	EGR	RCH	JA
12SE01	R	A3	-	-		ADDED NOTES (2 PLCS), REVISED TOL, REVISED MAT'L SPEC & UPDATED PDM ATTRIBUTES	214519	JYD	EGR	RC
08OCO2	R	A4	-	-		DIM 29.68 +0.15/-0.4 WAS 29.68 ±0.15	230859	EOV	EOV	JDV

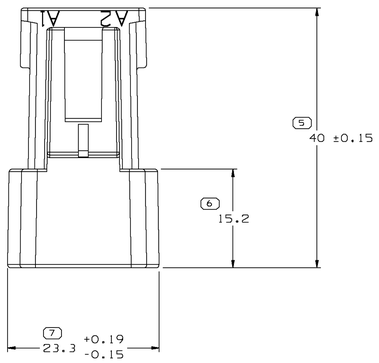

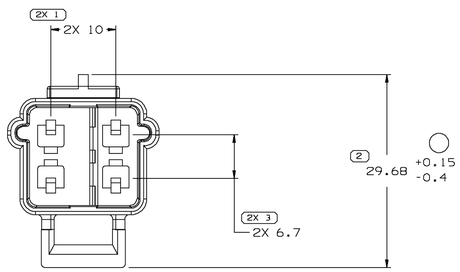

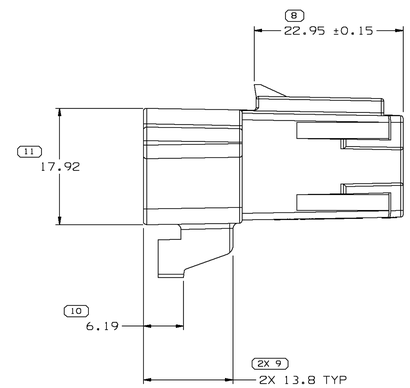

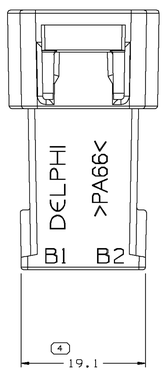

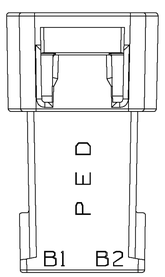

OPTIONAL CONSTRUCTION

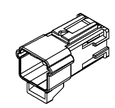

NOTES

1. UNLESS OTHERWISE SPECIFIED AND/OR INDICATED:
   DIMENSIONS ARE TO FACE OF VIEW SHOWN AND AUTOMATICALLY ROUNDED BY COMPUTER FOR INSPECTION (SEE MATH MODEL FOR PRECISE DIMENSIONS). FOR ALL OTHER DIMENSIONS NOT SHOWN BUT REQUIRED FOR TOOL BUILD, SEE MATH MODEL FOR PRECISE TOOL PATH DATA.
2. MATERIAL RECYCLING CODE >PA66< PER SAE J1344. (2.3)X(0.1) RAISED CHARACTERS AS SHOWN TO BE LOCATED ON ANY EXTERIOR SURFACE. OPTIONAL CONSTRUCTION TO BE NO MATERIAL RECYCLING CODE.
3. THIS PART IS NOT CONTROLLED FOR AUTOMATIC FEEDING.
4. MATING COMPONENTS OR EQUIVALENT:
   CONNECTOR 12191739
   TERMINAL 12034047
   SECONDARY TERMINAL LOCK 12176633
   CONNECTOR POSITION ASSURANCE 12052834
5. (2.3)X(0.1) RAISED DELPHI CORPORATE BRAND TO BE LOCATED ON ANY EXTERIOR SURFACE, PREFERABLY VISIBLE AT FINAL ASSEMBLY. OPTIONAL CONSTRUCTION TO BE "PED" OR NO LOGO.

(4) PROCESS SENSITIVE DIMENSION

DIMENSIONS ENCLOSED IN ( ) INDICATE REFERENCE DIMENSIONS AND NO TOLERANCE LIMITS ARE ESTABLISHED

R 0.1 MAX
R 0.2 MAX
SHARP CORNER TOLERANCE

DIMENSIONAL RANGE (MM)									CHART E1
FROM	> 0	> 20	> 30	> 70	>100	>150	>200	>250	>300
TO	20	30	70	100	150	200	250	300	400
TOLERANCE UNLESS OTHERWISE SPECIFIED									
±0.15	±0.2	±0.4	±0.5	±0.6	±0.8	±1	±1.2		
ANGULAR TOLERANCE ±2°									

THIRD ANGLE PROJECTION

DO NOT SCALE
USE MATH DATA

UNIGRAPHICS

DWG TYPE	PART DRAWING
STYLE	
VOLUME (CM³)	5.547
DISTR CODE	D
ROUTING	6900

UNLESS OTHERWISE SPECIFIED

THIS DOCUMENT IS IN ACCORDANCE WITH ASME Y14.5M-1994 AS AMENDED BY THE GM GLOBAL DIMENSIONING AND TOLERANCING ADDENDUM - 1997. ALL GEOMETRIC TOLERANCES AND RELATED DATUMS APPLY RFS. RULE #1(PERFECT FORM AT MMC) DOES NOT APPLY WHEN RELATIONSHIP BETWEEN FEATURES IS ESTABLISHED BY ORIENTATION OR LOCATION TOLERANCES. SIZE FEATURES MAY ALSO BE GAGED SEPARATELY, REGARDLESS OF TOLERANCE.
ALL DIMENSIONS ARE IN MILLIMETERS

REFERENCE

DELPHI

DELPHI PACKARD ELECTRIC SYSTEMS
WARREN,OH

		DATE
DR	L. WALTERS	08AP97
APVD1	R. PETRUS	08AP97
APVD2	R. PETRUS	08AP97
APVD3		
APVD4		
APVD5		

SUBSTANCES OF CONCERN AND RECYCLED CONTENT PER DELPHI 10949001

MATERIAL
M3592006 PA66 HS IM YEL

DRAWING NAME
CONN 4M M/P 280

DRAWING NUMBER
15304974

SIZE	SCALE	FRAME NO	SHEET NO	STG	REV	N/P
A0	3:1	1 OF 1	1 OF 1	R	A4	-