SYMBOL DEFINITION			MISSING SYMBOLS
A DIMENSION WITHOUT AN INSPECTION REPORT SYMBOL ⬭ DOES NOT REQUIRE INSPECTION. IT MAY BE CONTROLLED ON THE INDIVIDUAL COMPONENT DRAWING.	TOTAL NO OF INSPECTIONS REQUIRED	39	NO MISSING SYMBOL NUMBER
	LAST NO. USED	25	

DWG STATUS					ZONE	REVISION HISTORY	AUTH	DR	APVD 1	APVD 2
DATE	STG	REV	N/P	CHG						
09AP07	R	01	-	-		RELEASED	401102	K.W	JWG	K.W
03JA08	R	01	AA	-		RELAXED TOLERANCE REVISED MATERIAL	403399	K.W	JWG	K.W
11AU08	R	01	AB	-		CORRECTED MATERIAL NAME	405518	K.W	JWG	EZ

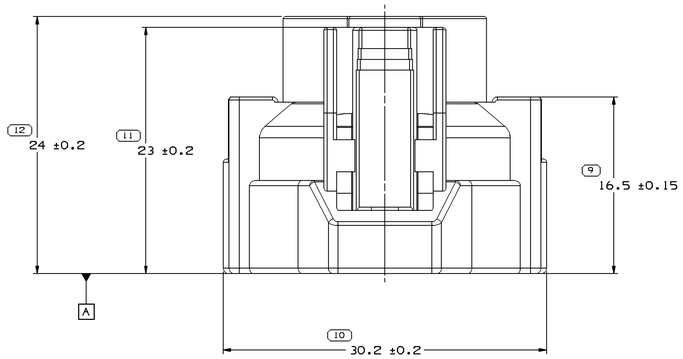

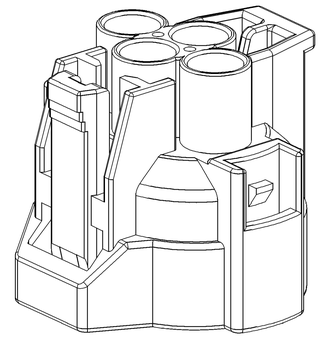

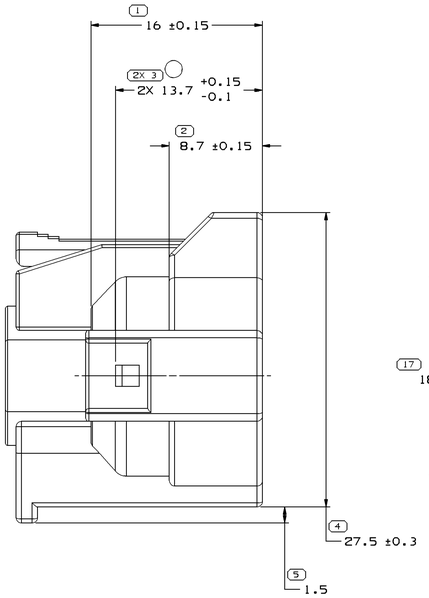

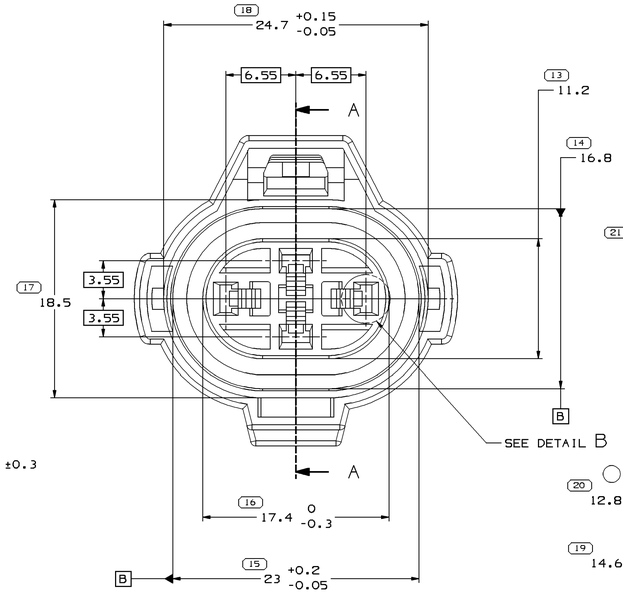

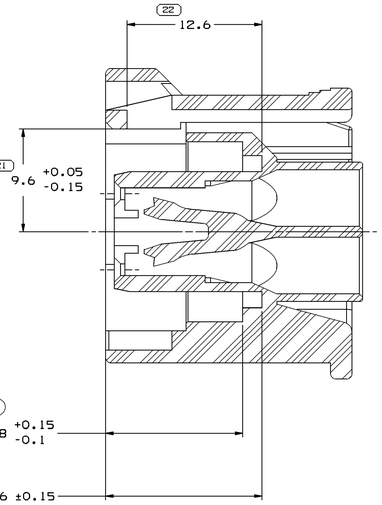

SECTION A - A

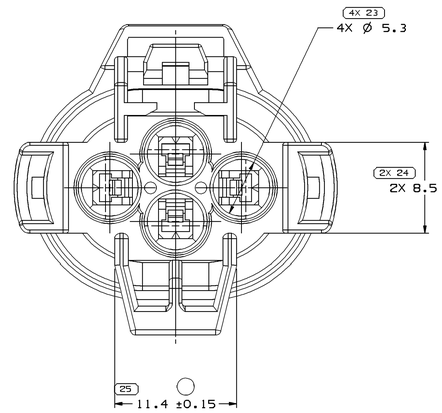

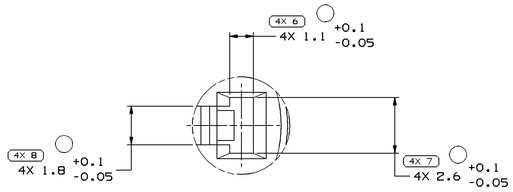

DETAIL B
SCALE 10:1

NOTES

1. UNLESS OTHERWISE SPECIFIED AND/OR INDICATED:

   DIMENSIONS ARE TO FACE OF VIEW SHOWN AND AUTOMATICALLY ROUNDED BY COMPUTER FOR INSPECTION (SEE MATH MODEL FOR PRECISE DIMENSIONS). FOR ALL OTHER DIMENSIONS NOT SHOWN BUT REQUIRED FOR TOOL BUILD, SEE MATH MODEL FOR PRECISE TOOL PATH DATA.

2. THIS PART USED IN ASSEMBLY 13641340.

3. THIS PART ACCEPTS THE FOLLOWING COMPONENTS OR EQUIVALENT:

   RETAINER 13641342
   CONNECTOR SEAL 13641343

4. REFERENCE MATING COMPONENTS OR EQUIVALENT:

   TERMINAL 12162894

5. MATERIAL RECYCLING CODE PER ISO 11469. (1.0)X(0.1) CHARACTERS AS SHOWN TO BE LOCATED ON ANY EXTERIOR SURFACE.

6. (1.0)X(0.1) DELPHI CORPORATE BRAND TO BE LOCATED ON ANY EXTERIOR SURFACE, PREFERABLY VISIBLE AT FINAL ASSEMBLY. OPTIONAL CONSTRUCTION FOR EXISTING TOOLING MAY BE "PED".

9 PROCESS SENSITIVE DIMENSION

DIMENSIONS ENCLOSED IN ( ) INDICATE REFERENCE DIMENSIONS AND NO TOLERANCE LIMITS ARE ESTABLISHED

DIMENSIONAL RANGE (MM)								CHART P
FROM	> 0	> 30	> 70	>100	>150	>200	>250	>300
TO	30	70	100	150	200	250	300	400
TOLERANCE UNLESS OTHERWISE SPECIFIED								
	±0.1	±0.3	±0.4	±0.5	±0.6	±0.8	±1	±1.2
ANGULAR TOLERANCE ±1°								

DWG TYPE: PART DRAWING

STYLE

VOLUME (CM³): 4.471

DISTR CODE: D

UNLESS OTHERWISE SPECIFIED

THIS DOCUMENT IS IN ACCORDANCE WITH ASME Y14.5M-1994 AS AMENDED BY THE GM GLOBAL DIMENSIONING AND TOLERANCING ADDENDUM-2001. SEPARATE PATTERNS OF FEATURES MAY BE DATED SEPARATELY REGARDLESS OF DATUM REFERENCES.

ALL DIMENSIONS ARE IN MILLIMETERS

REFERENCE

THIRD ANGLE PROJECTION

DO NOT SCALE
USE MATH DATA

NX

DELPHI

DELPHI PACKARD ELECTRIC SYSTEMS
WARREN, OH

		DATE
DR		
APVD1	KUN WU	09AP07
APVD2	JIANWEI GUO	09AP07
APVD3	KUN WU	09AP07
APVD4	WAVE SHAO	09AP07
APVD5		

SUBSTANCES OF CONCERN AND RECYCLED CONTENT PER DELPHI [094900]

MATERIAL: POLYAMIDE BLEDN

DRAWING NAME: CONN 4 F 090 NAT SLD

DRAWING NUMBER: 13641341

SIZE	SCALE	FRAME NO	SHEET NO	STG	REV	N/P
A0	5:1	1 OF 1	1 OF 1	R	01	AB

Plot: [Grand] 13641341-CUS01-S01 Date: 11-Aug-08 Time: 16:09
Designer: