SYMBOL DEFINITION			MISSING SYMBOLS
A DIMENSION WITHOUT AN INSPECTION REPORT SYMBOL ( ) DOES NOT REQUIRE INSPECTION. IT MAY BE CONTROLLED ON THE INDIVIDUAL COMPONENT DRAWING.	TOTAL NO OF INSPECTIONS REQUIRED	10	NO MISSING SYMBOL NUMBER
	LAST NO. USED	10	

DWG STATUS					ZONE	REVISION HISTORY	AUTH	DR	APVD 1	APVD 2
DATE	STG	REV	N/P	CHG						
03AP07	R	01	-	-		RELEASED	400744	JG	OY	JG
29AU07	R	02	-	-		UPDATED PDM ATTRIBUTE	402235	AZ	OY	AZ
28DE07	R	03	-	-		UPDATED PDM ATTRIBUTE	403385	AZ	OY	AZ
27FE08	R	04	-	-		UPDATED PDM ATTRIBUTE	403946	AZ	OY	AZ
17MR08	R	05	-	-		UPDATED PDM ATTRIBUTE.	404146	AZ	EZ	AZ
25AP08	R	06	-	-		CUSTOMER LOGO AND PN FEATURE DELETED	404510	SBH	JWG	EZ
19MY08	R	06	AA	-		DIM#1 WAS 60 +/-2 DEGREE	404756	SBH	JWG	EZ

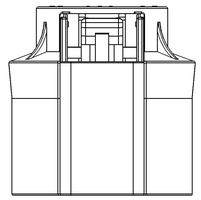

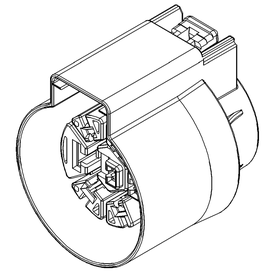

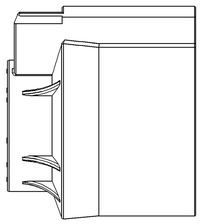

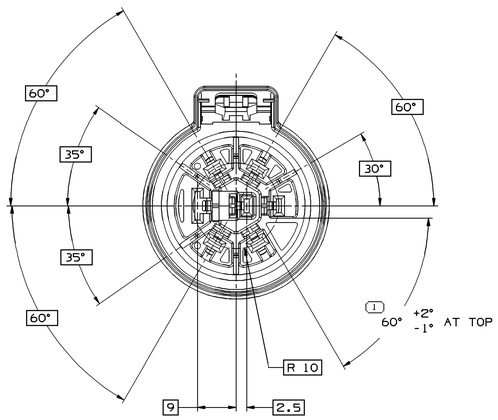

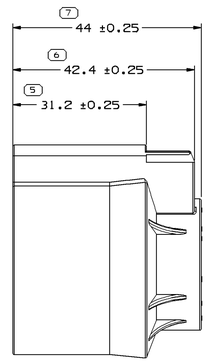

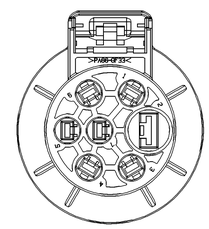

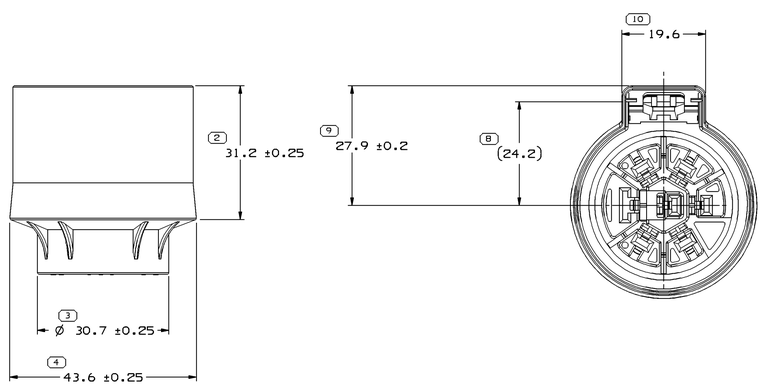

NOTES

1. UNLESS OTHERWISE SPECIFIED AND/OR INDICATED:

   DIMENSIONS ARE TO FACE OF VIEW SHOWN AND AUTOMATICALLY ROUNDED BY COMPUTER FOR INSPECTION (SEE MATH MODEL FOR PRECISE DIMENSIONS). FOR ALL OTHER DIMENSIONS NOT SHOWN BUT REQUIRED FOR TOOL BUILD, SEE MATH MODEL FOR PRECISE TOOL PATH DATA.

2. THIS PART USED IN ASSEMBLY 13628883.
3. MATERIAL RECYCLING CODE PER ISO 11469. (1)X(0.1) CHARACTERS AS SHOWN TO BE LOCATED ON ANY EXTERIOR SURFACE.
4. THIS PRODUCT IS NOT CATEGORIZED AS AN APPEARANCE ITEM. MINOR IMPERFECTIONS INCLUDING, BUT NOT LIMITED TO, FLOW MARKS, COLOR BLEMISHES, GATE VESTIGE, AND SOFT FLASH THAT DO NOT AFFECT THE FIT, FORM, OR FUNCTION OF THE PART ARE PERMISSIBLE PER NAP 4.10-18.
5. REFERENCE MATING COMPONENTS OR EQUIVALENT:
   TPA:13628882
   SEAL:13628881
   CPA:15317832
6. FOR APPLICATION DATA SEE THE APPLICATION DRAWING.

7 PROCESS SENSITIVE DIMENSION

DIMENSIONS ENCLOSED IN ( ) INDICATE REFERENCE DIMENSIONS AND NO TOLERANCE LIMITS ARE ESTABLISHED

DIMENSIONAL RANGE (MM)								CHART P
FROM	> 0	> 30	> 70	>100	>150	>200	>250	>300
TO	30	70	100	150	200	250	300	400
TOLERANCE UNLESS OTHERWISE SPECIFIED								
	±0.1	±0.3	±0.4	±0.5	±0.6	±0.8	±1	±1.2
ANGULAR TOLERANCE ±1°								

DWG TYPE: PART DRAWING

STYLE

VOLUME (CUF): 22.182

DISTR CODE

UNLESS OTHERWISE SPECIFIED

THIS DOCUMENT IS IN ACCORDANCE WITH ASME Y14.5M-1994 AS AMENDED BY THE GM GLOBAL DIMENSIONING AND TOLERANCING ADDENDUM-2001. SEPARATE PATTERNS OF FEATURES MAY BE GAGED SEPARATELY REGARDLESS OF DATUM REFERENCES.

ALL DIMENSIONS ARE IN MILLIMETERS

REFERENCE

THIRD ANGLE PROJECTION

DO NOT SCALE

USE MATH DATA

NX

DELPHI

DELPHI PACKARD ELECTRIC SYSTEMS
WARREN, OH

		DATE
DR		
APVD1	JARRY GU	03AP07
APVD2	OLIVER YU	03AP07
APVD3	JARRY GU	03AP07
APVD4		
APVD5		

SUBSTANCES OF CONCERN AND RECYCLED CONTENT PER DELPHI [094900]

MATERIAL: PA66 GF33 BLACK

DRAWING NAME: CONN 7 F 2.8 APEX 6.35 NGI SLD

DRAWING NUMBER: 13628880

SIZE	SCALE	FRAME NO	SHEET NO	STG	REV	N/P
A0	2:1	1 OF 1	1 OF 1	R	06	AA

User: 15517
Dwg: 13628880-CU501-S01 Date: 19-May-08 Time: 16:27
Message: