SYMBOL DEFINITION			MISSING SYMBOLS
A DIMENSION WITHOUT AN INSPECTION REPORT SYMBOL ( ) DOES NOT REQUIRE INSPECTION. IT MAY BE CONTROLLED ON THE INDIVIDUAL COMPONENT DRAWING.	TOTAL NO OF INSPECTIONS REQUIRED	12	NO MISSING SYMBOL NUMBER
	LAST NO. USED	12	

DWG STATUS DATE	STG	REV	N/P	CHG	ZONE	REVISION HISTORY	AUTH	DR	APVD 1	APVD 2
170C06	R	01	-	-		RELEASED	285783	TM	JWG	TM
14FE07	R	02	-	-		REDRAWN TO PD REVISING STRUCTURE ADD PROCESS REQUEST NOTES	400533	K.W	JWG	K.W

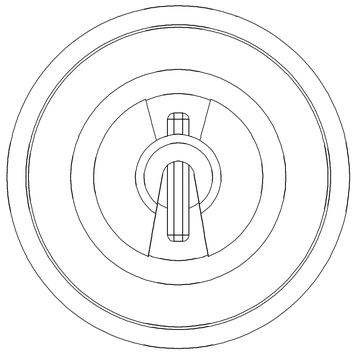

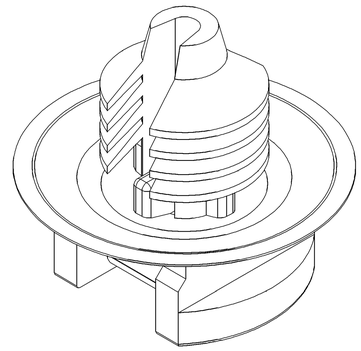

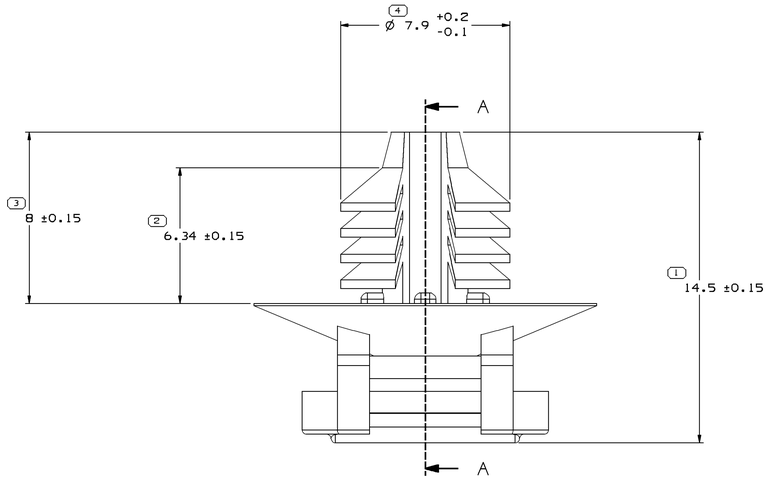

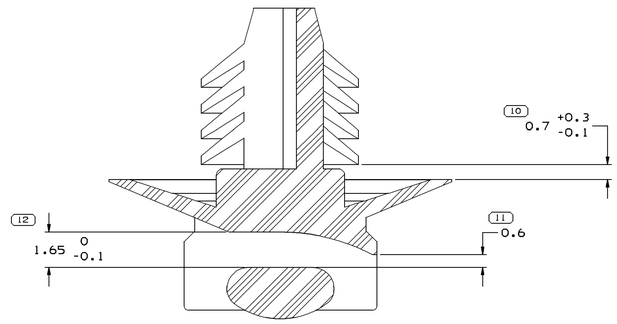

SECTION A - A

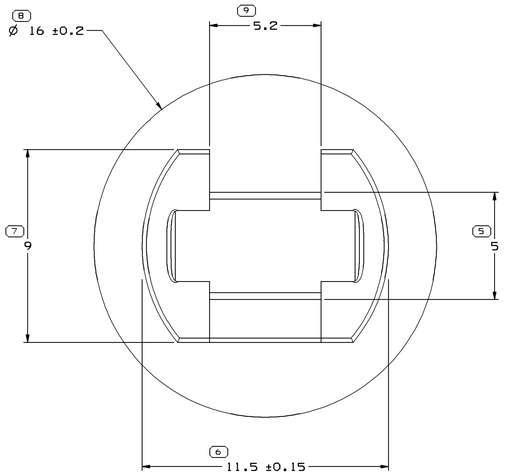

NOTES

1. UNLESS OTHERWISE SPECIFIED AND/OR INDICATED:

   DIMENSIONS ARE TO FACE OF VIEW SHOWN AND AUTOMATICALLY ROUNDED BY COMPUTER FOR INSPECTION (SEE MATH MODEL FOR PRECISE DIMENSIONS). FOR ALL OTHER DIMENSIONS NOT SHOWN BUT REQUIRED FOR TOOL BUILD, SEE MATH MODEL FOR PRECISE TOOL PATH DATA.

2. THIS PART USED IN ASSEMBLY 13608117.

3. THIS PART ACCEPTS THE FOLLOWING COMPONENTS OR EQUIVALENT:

   TIE 13608120

PROCESS NOTE:

1. PART IS TO BE WET PACKED. USE POLYETHYLENE BAY LINER IN INTENDED SHIPPING BOX.ADD CLEAN WATER , 1 1/2% BY PART WEIGHT TO CONTAINER, CLOSE AND SEAL LINER.

1 PROCESS SENSITIVE DIMENSION
DIMENSIONS ENCLOSED IN ( ) INDICATE REFERENCE DIMENSIONS AND NO TOLERANCE LIMITS ARE ESTABLISHED

DIMENSIONAL RANGE (MM)								CHART P
FROM	> 0	> 30	> 70	>100	>150	>200	>250	>300
TO	30	70	100	150	200	250	300	400
TOLERANCE UNLESS OTHERWISE SPECIFIED								
	±0.1	±0.3	±0.4	±0.5	±0.6	±0.8	±1	±1.2
ANGULAR TOLERANCE ±1°								

DWG TYPE: PART DRAWING

STYLE

VOLUME (CM³): 0.496

DISTR CODE

UNLESS OTHERWISE SPECIFIED

THIS DOCUMENT IS IN ACCORDANCE WITH ASME Y14.5M-1994 AS AMENDED BY THE GM GLOBAL DIMENSIONING AND TOLERANCING ADDENDUM-2001. SEPARATE PATTERNS OF FEATURES MAY BE GAGED SEPARATELY REGARDLESS OF DATUM REFERENCES.

ALL DIMENSIONS ARE IN MILLIMETERS

REFERENCE

THIRD ANGLE PROJECTION

DO NOT SCALE

USE MATH DATA

NX

DELPHI

DELPHI PACKARD ELECTRIC SYSTEMS
WARREN, OH

		DATE
DR		
APVD1	TRIM MA	170C06
APVD2	JIAN WEI GUO	170C06
APVD3	TRIM MA	170C06
APVD4		
APVD5		

SUBSTANCES OF CONCERN AND RECYCLED CONTENT PER DELPHI (094900)

MATERIAL
M3592001 PA66 HS IM BLK

DRAWING NAME
MOUN CLIP

DRAWING NUMBER
13608119

SIZE	SCALE	FRAME NO	SHEET NO	STG	REV	N/P
A0	10:1	1 OF 1	1 OF 1	R	02	-

User: tzrrod1
Model: 13608119-CUS01-S01 Date: 13-Jul-07 Time: 13:10
Workspace: