SYMBOL DEFINITION		MISSING SYMBOLS
A DIMENSION WITHOUT AN INSPECTION REPORT SYMBOL (▭) DOES NOT REQUIRE INSPECTION. IT MAY BE CONTROLLED ON THE INDIVIDUAL COMPONENT DRAWING.	TOTAL NO OF INSPECTIONS REQUIRED 59	1-2 8 10-11 14 16-18 20 22-28 30 33 37-45 48-60 62-63 65-68
	LAST NO. USED 71	

DWG STATUS					ZONE	REVISION HISTORY	AUTH	DR	APVD	APVD
DATE	SYS	REV	N/P	CHG					1	2
26APO2	R	03	-	-	-	REDRAWN TO PD, ADDED 4 DIMS, NOTES AND REVISED MAT'L SPEC	224419	LEG	DR	JH
31AUO5	R	04	-	-	-	REMOVED DIMS & NOTE #6; ADDED FLASH NOTES (3 PLCS); REVISED DIMS (6 PLCS)	271996	JS	JS	GD

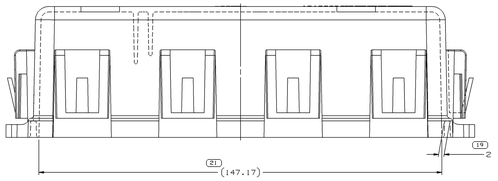

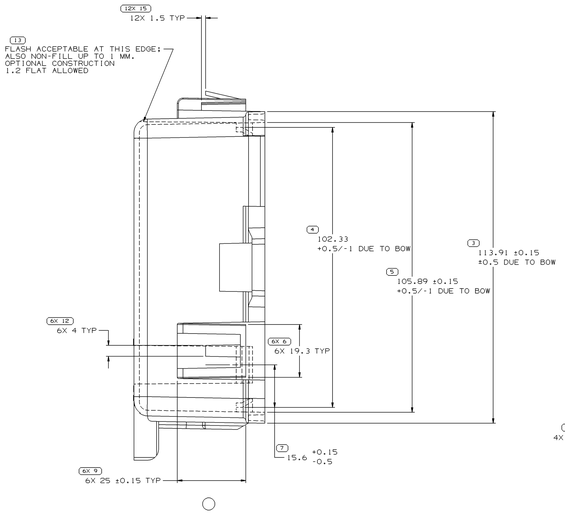

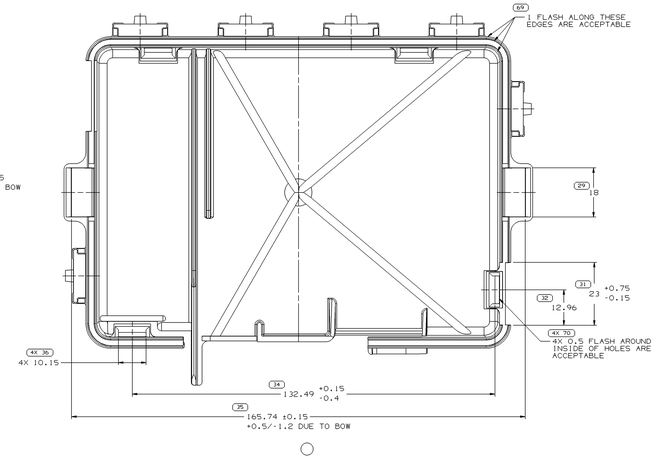

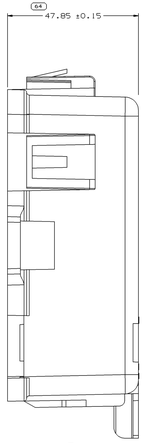

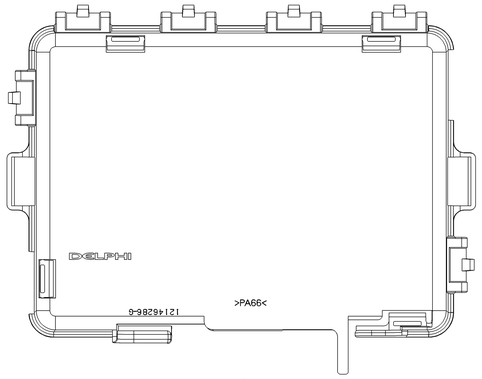

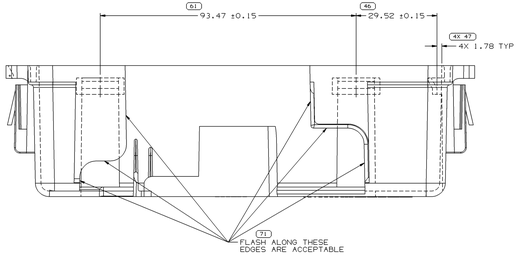

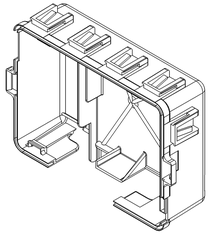

NOTES

1. UNLESS OTHERWISE SPECIFIED AND/OR INDICATED:
   DIMENSIONS ARE TO FACE OF VIEW SHOWN AND AUTOMATICALLY ROUNDED BY COMPUTER FOR INSPECTION (SEE MATH MODEL FOR PRECISE DIMENSIONS). FOR ALL OTHER DIMENSIONS NOT SHOWN BUT REQUIRED FOR TOOL BUILD, SEE MATH MODEL FOR PRECISE TOOL PATH DATA.
2. MATERIAL RECYCLING CODE >PA66< PER SAE J1344. (2.3)X(0.1) RAISED CHARACTERS AS SHOWN TO BE LOCATED ON ANY EXTERIOR SURFACE. OPTIONAL CONSTRUCTION TO BE NO MATERIAL RECYCLING CODE.
3. MATING COMPONENTS OR EQUIVALENT:
   FUSE/RELAY BODY ASM 12146339
   COVER 12146282
4. (2.3)X(0.1) RAISED DELPHI CORPORATE BRAND TO BE LOCATED ON ANY EXTERIOR SURFACE, PREFERABLY VISIBLE AT FINAL ASSEMBLY. OPTIONAL CONSTRUCTION TO BE "PED" OR NO LOGO.
5. COMPONENT MUST SHOW CURRENT P/N AND REV LEVEL AS INDICATED.

35 PROCESS SENSITIVE DIMENSION

DIMENSIONS INCLUDED ONLY WHEN REFERENCE MEMORYLINE AND GD TOLERANCE LIMITS ARE EXTENDED

DIMENSIONAL RANGE (MM)										
FROM	0	>6	>10	>18	>30	>100	>200	>300	>400	>500
TO	6	10	18	30	100	200	300	400	500	
TOLERANCE UNLESS OTHERWISE SPECIFIED										
±0.15	±0.2	±0.25	±0.3	±0.4	±0.5	±0.8	±1	±1.2		
ANGULAR TOLERANCE ±2°										

DWG TYPE	
PART DRAWING	
STYLE	
VOLUME (CM³) 87.773	SYSTEM CODE

UNLESS OTHERWISE SPECIFIED
THIS DOCUMENT IS IN ACCORDANCE WITH ASME Y14.5M-1994 UNLESS OTHERWISE SPECIFIED. DIMENSIONS ARE TO BE COMPUTED MINIMUM DATA. SEPARATE PATTERNS OF FEATURES MAY BE SHARED DEPARTMENTALLY REGARDLESS OF DATUM REFERENCE.

ALL DIMENSIONS ARE IN MILLIMETERS

REFERENCE

THIRD ANGLE PROJECTION

DO NOT SCALE

USE MATH DATA

DELPHI

DELPHI PACKARD ELECTRIC SYSTEMS
WARREN, OH

	DATE
APVD1 JOE SUDIK	12MR99
APVD2 JOE SUDIK	14MR99
APVD3 GARY DETTER	7MR99
APVD4	
APVD5	

SUBSTANCES OF CONCERN AND RECYCLED CONTENT PER DELPHI (10497000)

MATERIAL
M25702001 PA66 HS IM BLK

DRAWING NAME
COV WIRE DRESS BLK

DRAWING NUMBER						
12146286						
SIZE	SCALE	FRAME NO	SHEET NO	STG	REV	N/P
A1x3	2:1	1 OF 2	1 OF 1	R	04	-

DRAWING NUMBER						
12146286						
SIZE	SCALE	FRAME NO	SHEET NO	STG	REV	N/P
A1x3	2:1	2 OF 2	1 OF 1	R	04	-

08SEP15 1