SYMBOL DEFINITION			MISSING NUMBERS
THE NUMBER INSIDE THE SYMBOL ( ) CORRESPONDS TO THE NUMBER ON THE INSPECTION REPORT FOR THIS DRAWING/PART NUMBER	TOTAL NO. OF SYMBOLS ON DRAWING	19	
	LAST NO. USED	21	

DWG STATUS					ZONE	REVISION HISTORY	AUTH	DR	APVD 1	APVD 2
DATE	STG	REV	N/P	CHG						
15APO3	R	D6	-	-		CLEARED REV COLUMN, ADDED DELPHI LOGO NOTE & RECYCLING CODE NOTE AND REVISED MATERIAL SPEC	239787	RH	RH	AM
19MYO3	R	D7	-	-		ADDED LABEL	241328	KGP	KGP	ET
23FE04	R	D8	-	-		UPDATED PDM ATTRIBUTES	252209	EES	EES	SN

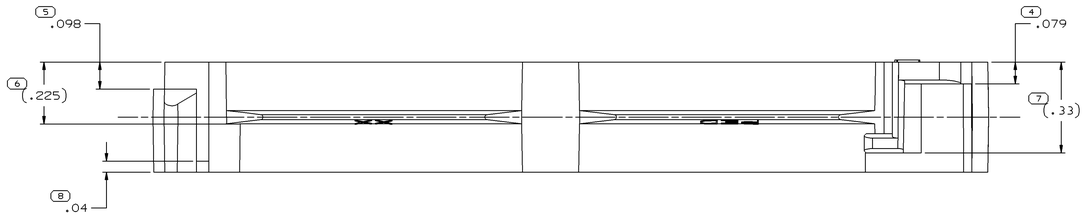

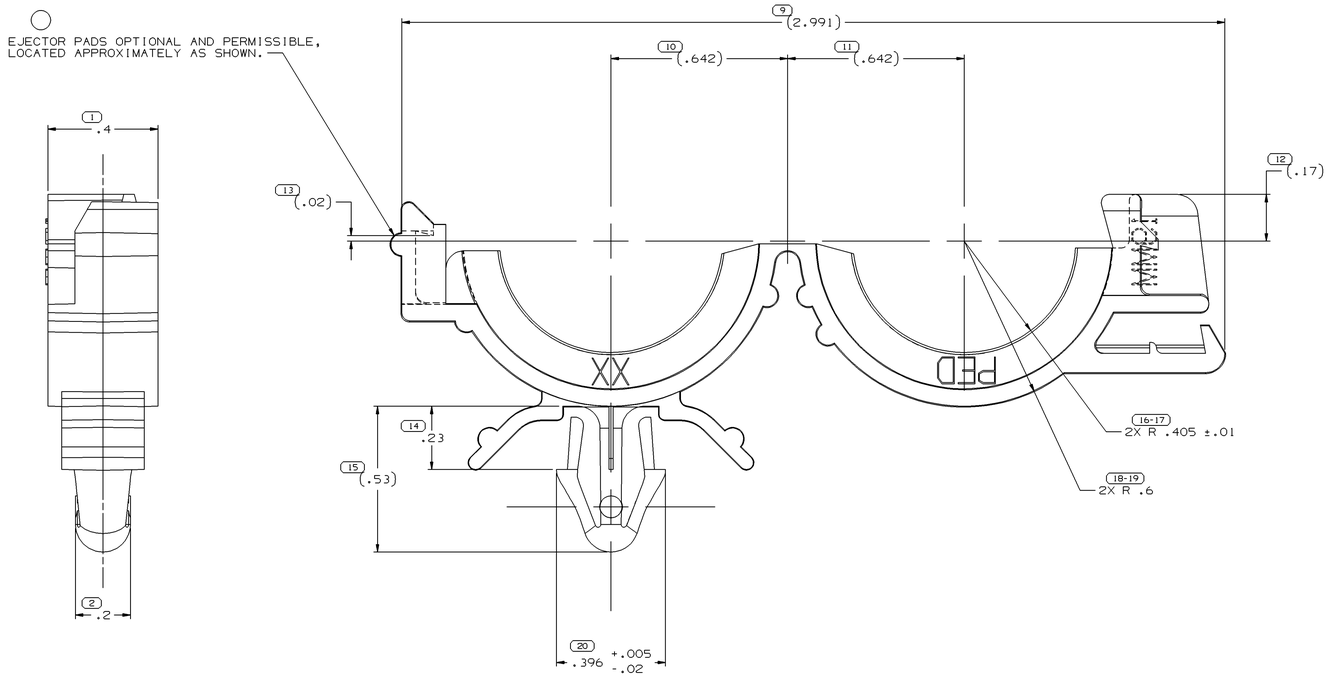

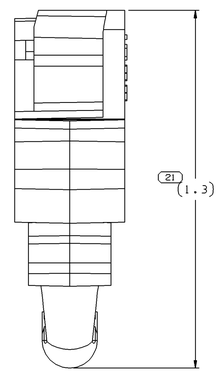

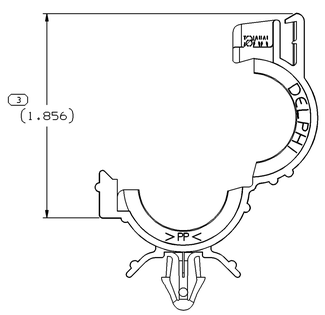

PREFERRED OPTIONAL CONSTRUCTION
SCALE 2:1

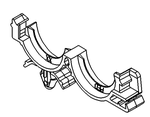

NOTES

1. UNLESS OTHERWISE SPECIFIED AND/OR INDICATED:
   DIMENSIONS ARE TO FACE OF VIEW SHOWN AND AUTOMATICALLY ROUNDED BY COMPUTER FOR INSPECTION (SEE MATH MODEL FOR PRECISE DIMENSIONS). FOR ALL OTHER DIMENSIONS NOT SHOWN BUT REQUIRED FOR TOOL BUILD, SEE MATH MODEL FOR PRECISE TOOL PATH DATA.
2. MATERIAL RECYCLING CODE >PP< PER SAE J1344. (.1)X(.01) RAISED CHARACTERS AS SHOWN TO BE LOCATED ON ANY EXTERIOR SURFACE. OPTIONAL CONSTRUCTION TO BE NO MATERIAL RECYCLING CODE.
3. (.1)X(.01) RAISED DELPHI CORPORATE BRAND TO BE LOCATED ON ANY EXTERIOR SURFACE, PREFERABLY VISIBLE AT FINAL ASSEMBLY. OPTIONAL CONSTRUCTION TO BE "PED" OR NO LOGO.
4. THIS PART TO FIT .750 I.D. CONVOLUTED CONDUIT.
5. RECOMMENDED HOLE SIZE FOR CLIP .240-.260 DIA HOLE IN .150 MAX THICK STOCK.

1 PROCESS SENSITIVE DIMENSION

DIMENSIONS ENCLOSED IN ( ) INDICATE REFERENCE DIMENSIONS AND NO TOLERANCE LIMITS ARE ESTABLISHED

DIMENSIONAL RANGE (IN)					CHART H
FROM	0	>.750	>1.250	>2.750	>4.000
TO	.750	1.250	2.750	4.000	
TOLERANCE UNLESS OTHERWISE SPECIFIED					
	±.005	±.010	±.012	±.016	±.020
ANGULAR TOLERANCE ±2°					

DWG TYPE: PART DRAWING

STYLE

VOLUME (CM³): 3.248

DISTR CODE: D

ROUTING: 6900

UNLESS OTHERWISE SPECIFIED

THIS DOCUMENT IS IN ACCORDANCE WITH ASME Y14.5M-1994 AS AMENDED BY THE GM GLOBAL DIMENSIONING AND TOLERANCING ADDENDUM - 1997. ALL GEOMETRIC TOLERANCES AND RELATED DATUMS APPLY RFS. RULE #1(PERFECT FORM AT MMC) DOES NOT APPLY. ALL DATUM FEATURES AND REFERENCE ESTABLISHED FOR ORIENTATION OR LOCATION TOLERANCES. SEPARATE POSITION CALLOUTS MAY BE GAGED SEPARATELY, REGARDLESS OF DATUM REFERENCE.
ALL DIMENSIONS ARE IN INCHES

REFERENCE

THIRD ANGLE PROJECTION

DO NOT SCALE

USE MATH DATA

CAD UG UNIGRAPHICS

DELPHI

DELPHI PACKARD ELECTRIC SYSTEMS
WARREN, OH

		DATE
DR		
APVD1	E. STEIN	13DE73
APVD2	R.D. KOLLAR	14DE73
APVD3	Mc GOWAN	18DE73
APVD4		
APVD5		

SUBSTANCES OF CONCERN AND RECYCLED CONTENT PER DELPHI 10949001

MATERIAL: M2097001 PP IM BLK

DRAWING NAME: MOUN CLIP 6.35 19.00 CDT ROSEBUD

DRAWING NUMBER: 08917320

SIZE	SCALE	FRAME NO	SHEET NO	STG	REV	N/P
AO	5:1	1 OF 1	1 OF 1	R	DB	-