Downloaded from DatasheetLib.com - datasheet search engine

used for: D-SUB COMBINATION

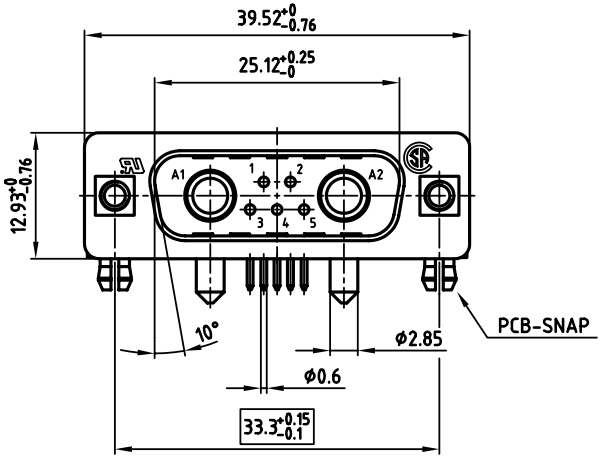

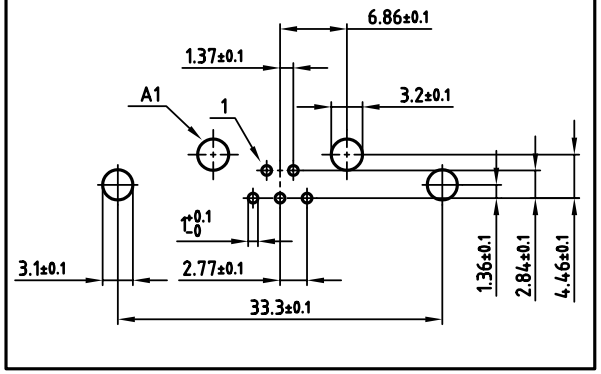

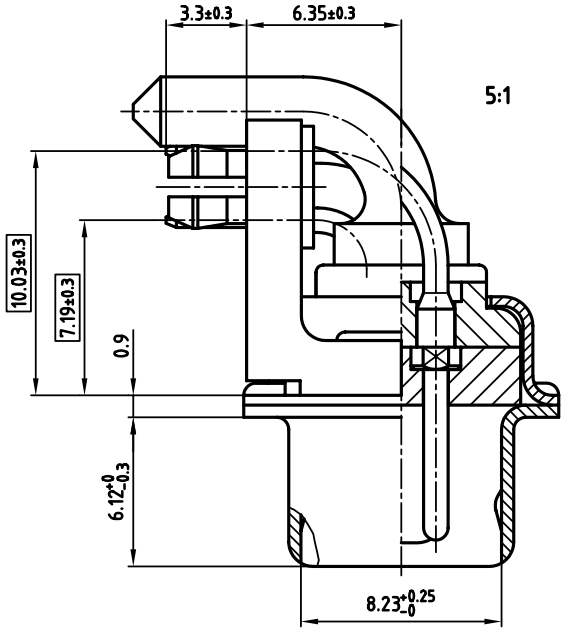

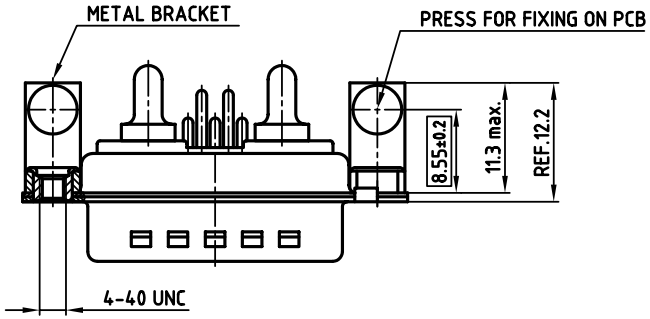

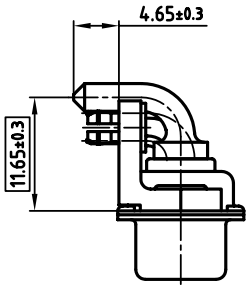

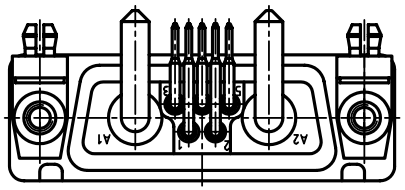

NOTES:

1. METALSHELLS: STEEL; min. 320µ" TIN over 80µ" NICKEL
2. INSULATORS: PBT GF UL 94 V-0, GREEN
3. CONTACTS: COPPER ALLOY
4. PLATING: min. 30µ" HARD GOLD OVER min. 50µ" NICKEL
5. HIGH POWER CONTACTS 20A: COPPER ALLOY
6. PLATING: min. 30µ" HARD GOLD OVER min. 50µ" NICKEL
7. METAL BRACKET: STEEL; min. 320µ" TIN over 80µ" NICKEL
8. THREADED INSERT: COPPER ALLOY; min. 200µ" TIN over 80µ" NICKEL
9. PCB-SNAP: COPPER ALLOY; min. 200µ" TIN over 80µ" NICKEL
   PCB-HOLE: ø3.1±0.1; PCB THICKNESS 1.6mm
10. MAXIMUM TORQUE VALUE FOR THREAD: 6" LBS
11. [ ] = CRITICAL DIMENSION: SPC

Directive 2002/95/EC „RoHS" Compliant

THIS DRAWING MAY NOT BE COPIED OR REPRODUCED IN ANY WAY, AND MAY NOT BE PASSED ON TO A THIRD PARTY WITHOUT WRITTEN PERMISSION. OWNERSHIP AND COPYRIGHT OF CONEC GmbH
DO NOT ALTER CAD DRAWING BY HAND

rev.	description	date	name

CONEC CORPORATION
BRAMPTON, ONTARIO

tolerance

2000	date	name
drawn	15.09.	Parei
appd.	15.09.	E. Mickenbecker
norm		
d-old		

CONEC®

scale: 2:1 (5:1)
material: SEE NOTES

title:
D-SUB COMBINATION MALE 90°
7W2P
with threaded insert, metal bracket and clip

dwg no: 13K1A080A
AutoCAD 2000 | DIN-A 3 | sh: 1/1

product no: 3007W2PCT56N40X