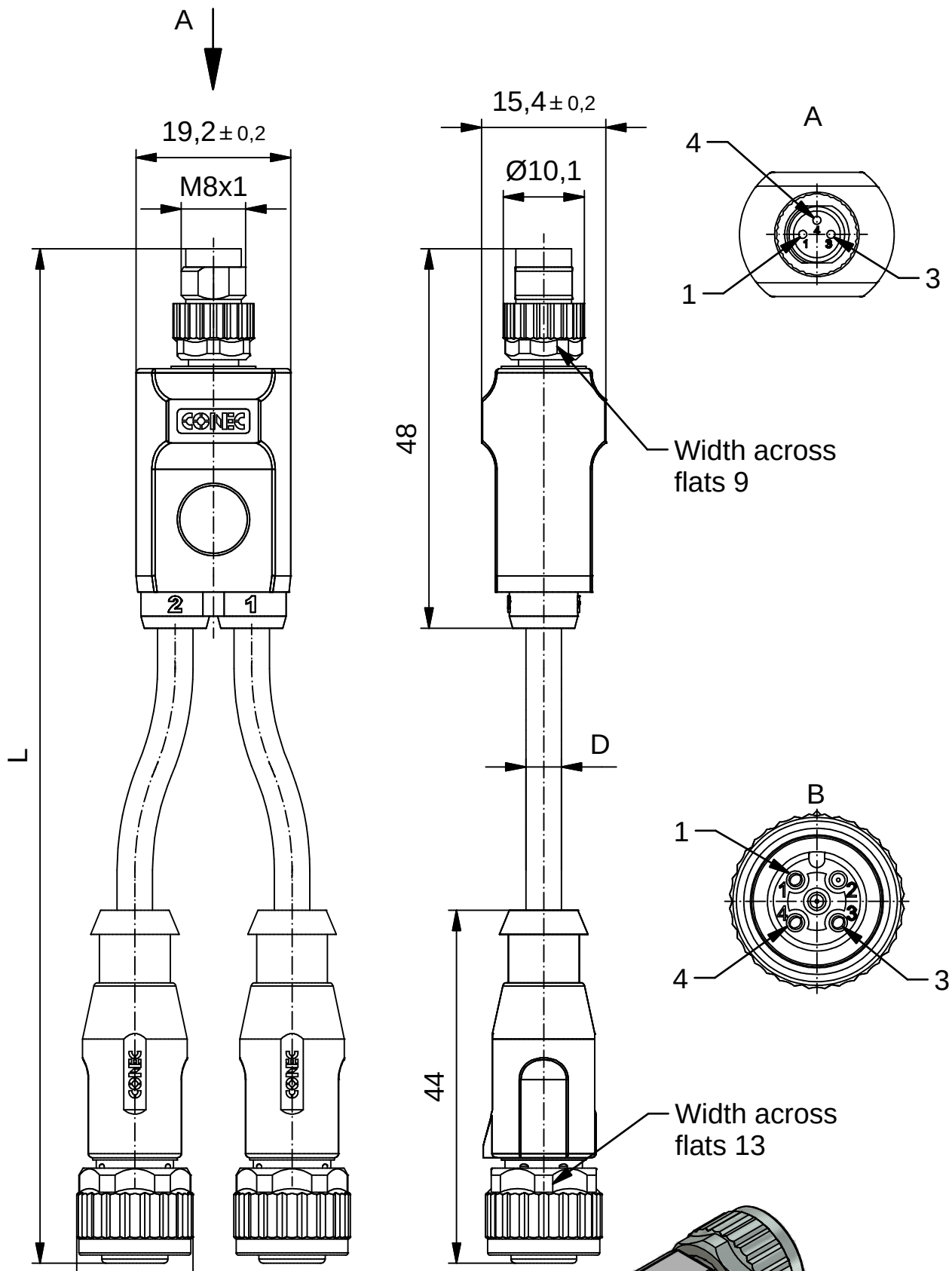

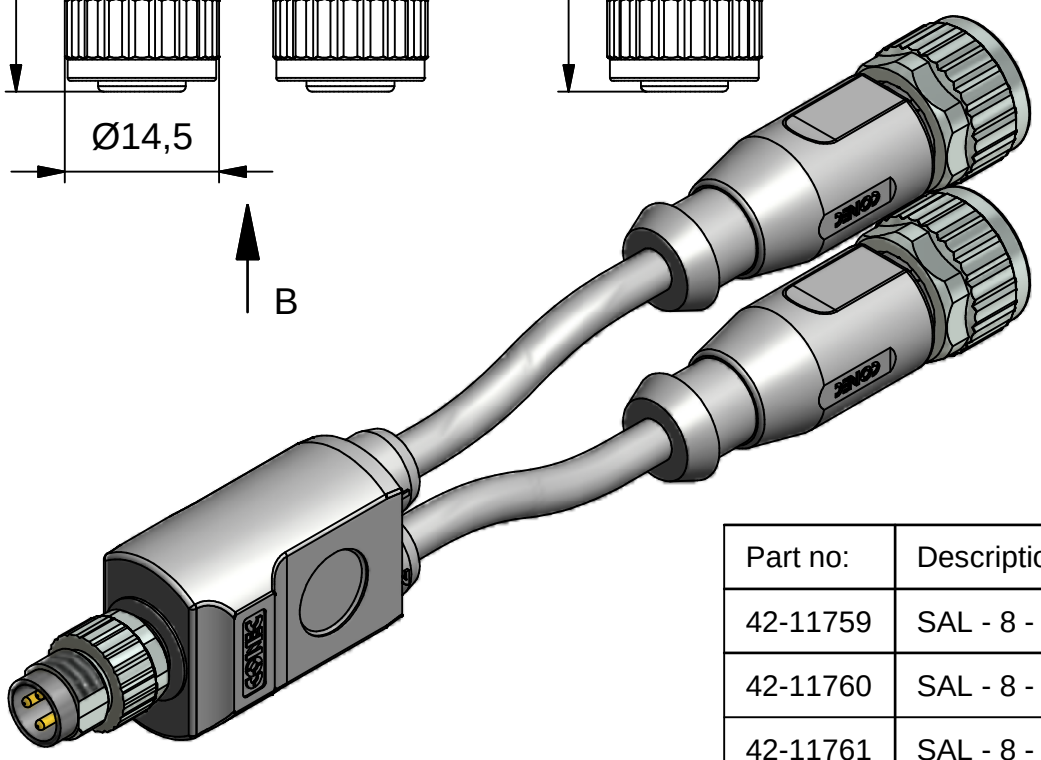

Technical specification :

Rated voltage: IEC 61076-2-104	60 V
Current rating: IEC 61076-2-104	3 A at 40℃
Insulation resistance: IEC 60512	>=100 MΩ
Pollution degree: IEC 60664-1	3/2
Degree of protection: IEC 60529	IP 67, in mated condition
Temperature range:	-30℃ ... +80℃
Mating cycles: IEC 60512-9a	>=100

Materials:

Contact:	CuZn
Contact plating:	Nickel, gold plated
Contact carrier:	PA, UL 94
Sealing:	FPM
Coupling nut/ screw:	GD-Zn, nickel plated
Moulding body:	TPU, UL 94, grey

Installation specification:

Recommended torque:	0,6 Nm at width across flats 13 0,4 Nm at width across flats 9
Conec installation tool:	Torque wrench: 36-000200 Insert across flats 13: 36-000220 Insert across flats 9: 36-000210

Contact assignment:

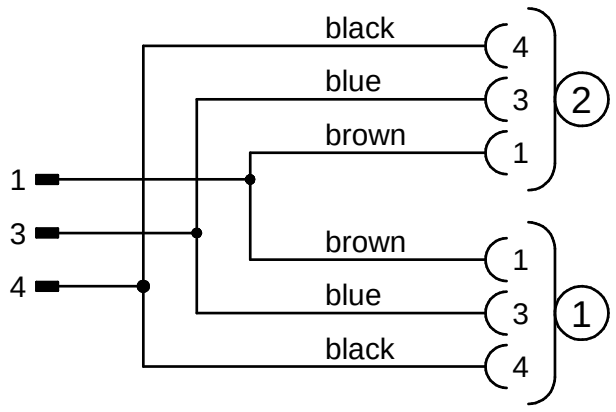

Part no:	Description:	Length L:	Cable:
42-11759	SAL - 8 - DS3 - 12 - 2RK3 - 0,3 / 0,3 / A1	0,3m	PVC, grey, 3x0,25mm² Cable: 781-A12300
42-11760	SAL - 8 - DS3 - 12 - 2RK3 - 0,6 / 0,6 / A1	0,6m	
42-11761	SAL - 8 - DS3 - 12 - 2RK3 - 1,5 / 1,5 / A1	1,5m	
42-11762	SAL - 8 - DS3 - 12 - 2RK3 - 3 / 3 / A1	3,0m	
42-xxxxx	SAL - 8 - DS3 - 12 - 2RK3 - ... / ... / A1	x	

D see data sheet cable

DO NOT ALTER CAD DRAWING BY HAND

Directive 2002/95/EC RoHS compliant

tolerance of cable: L <= 4m: L + 40mm; L > 4m: L + 1%

general tolerance: 0 ± 0,50mm; 0,0 ± 0,25mm; 0,00 ± 0,10mm

THIS DRAWING MAY NOT BE COPIED OR REPRODUCED IN ANY WAY, AND MAY NOT BE PASSED ON TO A THIRD PARTY WITHOUT WRITTEN PERMISSION. OWNERSHIP AND COPYRIGHT OF CONEC GmbH

dim. in mm

	date	name
drawn	18.10.12	Fromm
appd.	18.10.12	Mankopf

title: Duo-distributor, male connector M8x1 axial - 2x female connector M12x1 axial

dwg no: 42K1A410

part no: see table