NOTES:

1.0 SPECIFICATIONS:

1.1 FREQ. RANGE: DC to 18.0 GHz

1.2 ATTENUATION VALUES: 0.5 to 30, 40, 50 & 60dB

1.3 ATTENUATION ACCURACY:

DC TO 12.4 GHz		12.4 TO 18.0 GHz	
0.5dB	±0.4dB	0.5dB	±0.4dB
1–4 dB	±0.75dB	1–4 dB	±0.75dB
5–8 dB	±0.75dB	5–8 dB	±1.00 dB
9–12dB	±1.00 dB	9–12dB	±1.25 dB
13–20dB	±1.50 dB	13–20dB	±1.50 dB
21–60dB	±2.00dB	21–30dB	±2.00dB

1.4 VSWR (MAX.):

DC to 4.0 GHz: 1.25:1

4.0 to 12.4 GHz: 1.45:1

12.4 to 18.0 GHz: 1.65:1

1.5 INPUT POWER (MAX.): 2 WATTS AVG. AT +25°C DERATED LINEARLY TO 0.5 WATTS AT +125°C

1.6 OPERATING TEMP. RANGE: –65°C TO +125°C

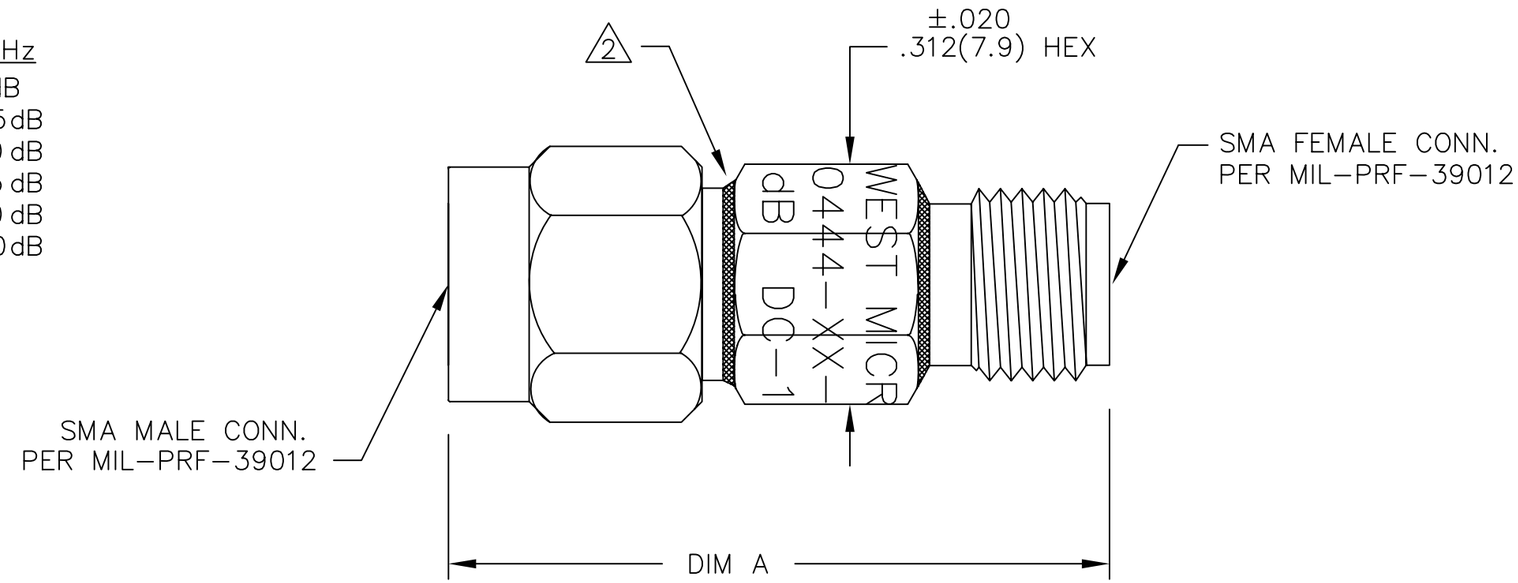

2 EPOXY UNIT PER EPX–08000–44–01

0.5 to 30dB GET EPOXIED ON FEMALE END ONLY

31 to 60dB GET EPOXIED ON BOTH ENDS.

3.0 MARKING

3.1 MARK UNIT AS SHOWN:

(REF.: INK–06205–27–XX)

4.0 DIMENSIONS IN PARENTHESIS ARE MILLIMETERS.

ATTENUATION VALUE	DIM A
1 thru 12dB	.86(21.8)
13 thru 30dB	1.02(25.9)
31 thru 60dB	1.25(31.8)

MODEL NUMBER: ATT–0444–XX–HEX–02

REV.: F1

REV.	DESCRIPTION	DATE
–	RELEASED	6/20/83
A	ECR 4636	7/17/86
B	ECR 6808	7/26/87
C	ECR 6933	11/27/90
C1	UPDATE MODEL NO.	2/4/91
D	ON CAD/UPDATE MARKING	3/1/93
E	ECN 14371	3/23/95
F	ECN 16216	9/16/97
F1	ADDED TITLEBLOCK	4/4/05

DRAWING NUMBER WAS:

04721–01–00 &

ATT–0444–XX–H00–02

UNLESS OTHERWISE NOTED DIMENSIONS ARE IN INCHES AND TOLERANCES ARE:

3 PLACE DECIMALS ±.005

2 PLACE DECIMALS ±.02

FRACTIONS ±1/64

PARALLELITY: T.I.R. _____

FLATNESS: T.I.R. _____

CONCENTRICITY: T.I.R. _____

ANGLES AND PERPENDICULARITY: ±1°

FSCM NO. 34078

MIDWEST MICROWAVE

NOTICE: The information contained in this drawing is proprietary and must not be used without the permission of Midwest Microwave

TITLE: ATTENUATOR

DRAWN/DATE	ENG./DATE	DRAWING NUMBER
A.BEATTY 3/1/93	G.KOZAK 3/2/93	ATT–0444–XX–HEX–02
CHECKED/DATE	APPROVED/DATE	
M.HOLLMAN 3/1/93		SCALE: 5=1 SHEET 1 of 1