CASE FINISH	CURRENT (AMPS)	WORKING VOLTAGE				MAXIMUM DC RESISTANCE (OHMS)	MAXIMUM VOLTAGE DROP		MINIMUM CAPACITANCE (uF)	MIN. INSERTION LOSS PER MIL-STD-220, FULL LOAD, +25°C												
		-55°C TO +85°C		-55°C TO +125°C																		
		AC	DC	AC	DC		DC	AC		14 KHz	30 KHz	50 KHz	75 KHz	100 KHz	150 KHz	300 KHz	500 KHz	1 MHz	10 MHz	100 MHz	1 GHz	10 GHz
SOLDER	10	---	80	---	50	0.005	0.050	---	1.4	--	15	--	--	--	28	33	--	44	60	70	70	--

PART MARKING:

SCI-2020-014
50 VDC
DATE CODE

PACKAGE MARKING:

STANDARD

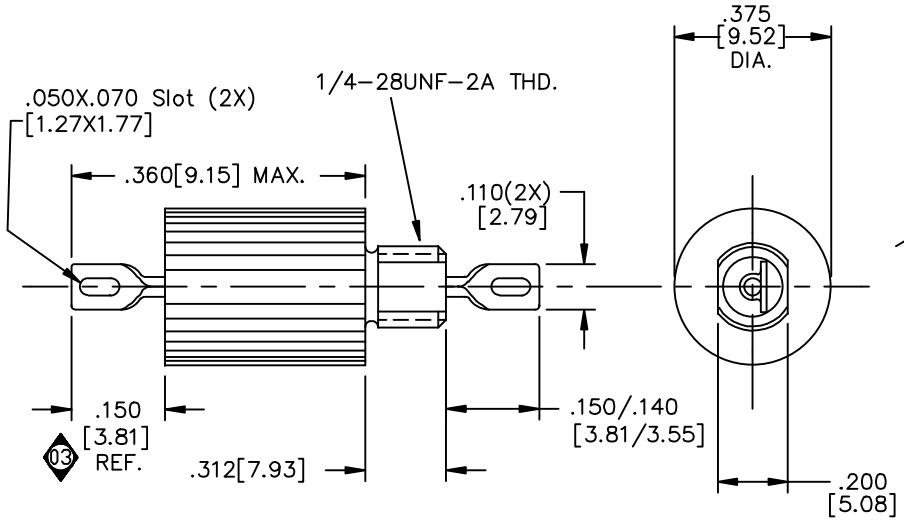

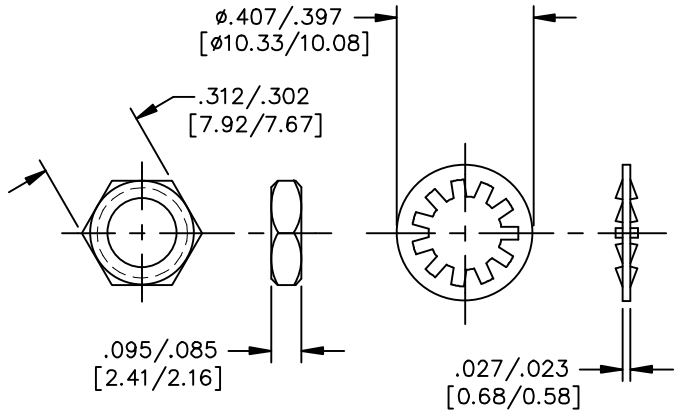

MTG. HARDWARE

MARKING NOTES:

N/A

SCHEMATIC

NOTES:

1) MOUNTING TORQUE NOT TO EXCEED 7in-lbs.

REV. NO.	CHANGE NOTICE
03	CN 58394-ENG
02	CN. 174977

UNLESS OTHERWISE SPECIFIED DIMENSIONS ARE IN INCHES. [MILLIMETERS]

DO NOT SCALE.

TOLERANCES UNLESS OTHERWISE SPECIFIED
Fractions ±
Dec. .xx±
Dec. .xxx± .010
Angles ±0° 30'

CODE IDENT. NO. OLSP2

SPECTRUM CONTROL INC.

FAIRVIEW PENNSYLVANIA

Dwn. KAUFFMAN
Ckd. 3-28-11
Apvd.
Sheet 1 of 1

Description Low Pass EMI Filter

SCI-2020-014

Quality Products From The Specialists In Electro-Magnetic Compatibility