ASSEMBLY NUMBER	MS NO.	PROTECTIVE CAP	DISK	WIRE ROPE ASSEMBLY	F DIA MAX	H ±.250	L MAX	Q DIA MAX	LL MAX	WT-LB	RELEASE
10-488996-6			NOT AVAILABLE								
-8	27511 8 R	10-241862-8	10-241851-101	10-305033-18	.630	3.000	.531	.719	.781		54524-78
-10	10 R	-10	10-554721-121	-18	.761			.812			54524-34
-12	12 R	-12	10-557166-122	-18	.936			1.000			54524-78
-14	14 R	-14	-142	-19	1.074	3.500		1.125			54524-34
-16	16 R	-16	-162	-19	1.172			1.250			54524-78
-18	18 R	-18	-182	-19	1.304			1.375			
-20	20 R	-20	-202	-32	1.435	4.000		1.500			
-22	22 R	-22	-222	-32	1.560			1.625			
-24	24 R	-24	-242	-41	1.688			1.750			53508-145

53508-145 REVISIONS				
ZONE	LTR	DESCRIPTION	DATE	APPROVED
		FOR CHANGES A1 THRU D, SEE RECORD DRAWING.		
	E	(CL II) REV COL "F" ECN: 25979	11/7/91 Prescott	P & SD

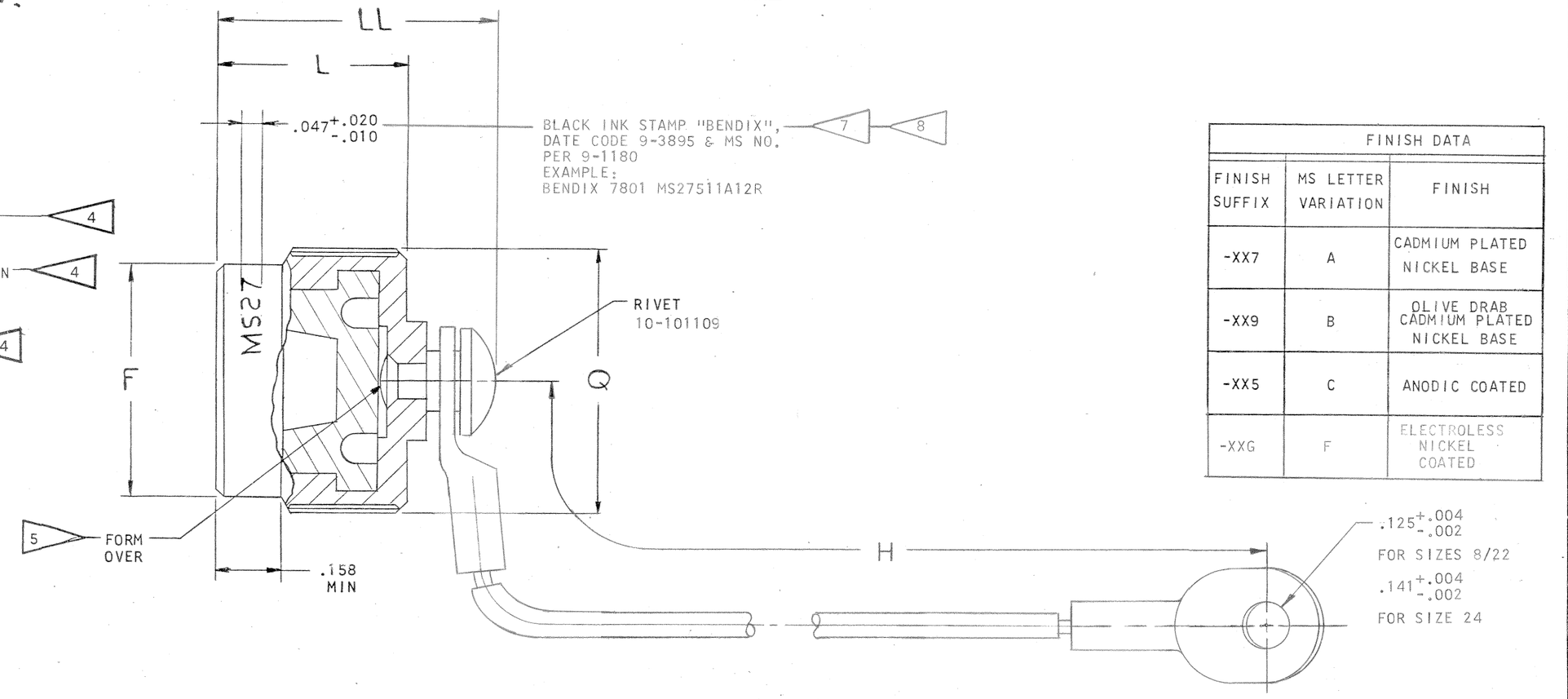

FINISH DATA		
FINISH SUFFIX	MS LETTER VARIATION	FINISH
-XX7	A	CADMIUM PLATED NICKEL BASE
-XX9	B	OLIVE DRAB CADMIUM PLATED NICKEL BASE
-XX5	C	ANODIC COATED
-XXG	F	ELECTROLESS NICKEL COATED

8. STAMPING IN TWO ROWS PERMISSIBLE.
7. DATE CODE MAY BE OMITTED WHEN SPACE LIMITATIONS MAKE IT IMPRACTICABLE.
6. UNITS ILLUSTRATED MEET THE REQUIREMENTS OF MIL-C-38999.
5. CHAIN MUST MOVE FREELY ON PROTECTIVE CAP AFTER ASSEMBLY.
4. FOR FINISH SUFFIX AND MS LETTER VARIATION, SEE FINISH DATA.
3. CAP TO BE USED WITH 87/88-443000/14 & OTHERS.
2. MATERIAL:
   CAP: ALUMINUM ALLOY
   DISK: SILICONE RUBBER
   WIRE ROPE & RIVET: STAINLESS STEEL PASSIVATED.
1. COUPLING SLOTS TO BE LUBRICATED PER 9-3031.

NOTES:

FIND NO.	QTY REQD	CODE IDENT	PART NUMBER	DESCRIPTION	NOTE REF

PARTS LIST

UNLESS OTHERWISE SPECIFIED
LINEAR DIMENSIONS ARE IN INCHES. TOLERANCES: .XXX ± .010, .XX ± .03, .X ± .1, ANGLES ± 2°. OTHER STANDARDS PER 9-3800 AND MIL-D-1000. NOTE REF

SIGNATURES		DATES
PREPARED	HASKINS	2-7-72
CHECKED	Whist	4-14-72
MATERIAL		
APPROVED	S. Young	4-6-72
APPROVED	W M Harmony	4.17.72

MATERIAL SPEC	PROCESS SPEC
	9-1180 9-3031 9-3895

The Bendix Corporation
Electrical Components Division
Sidney, New York

TITLE: CAP, PROTECTIVE, RECEPTACLE, TYPE MSJT()

U

SIZE	CODE IDENT NO.	
C	77820	10-488996

SCALE NONE | WT SEE COLUMN | REF 10-241866 10-463096 | SHEET

USE OF THIS DOCUMENT IS UNLIMITED. DOCUMENTS REFERENCED HEREON CONTAIN LIMITED RIGHTS DATA.

NEXT ASSEMBLY

TAB.