REV.	DATE	DESCRIPTION
A	12/29/00	UPDATE PLATING TO SILVER

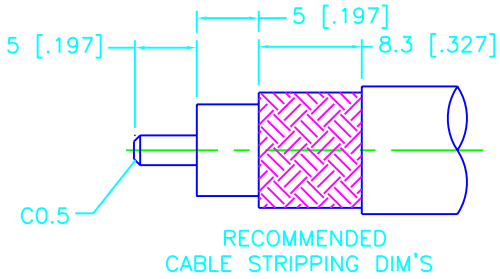

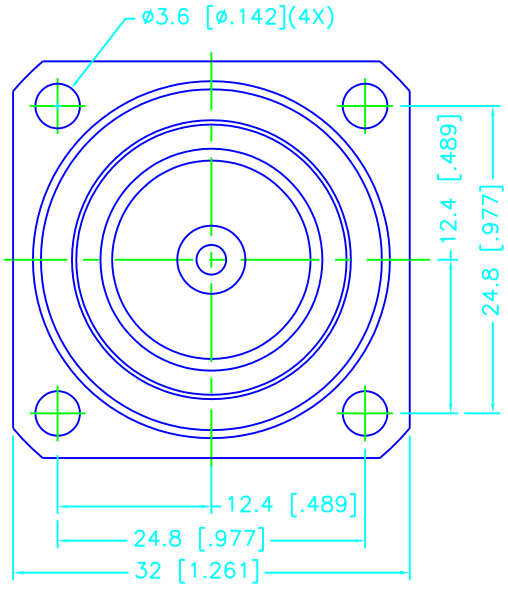

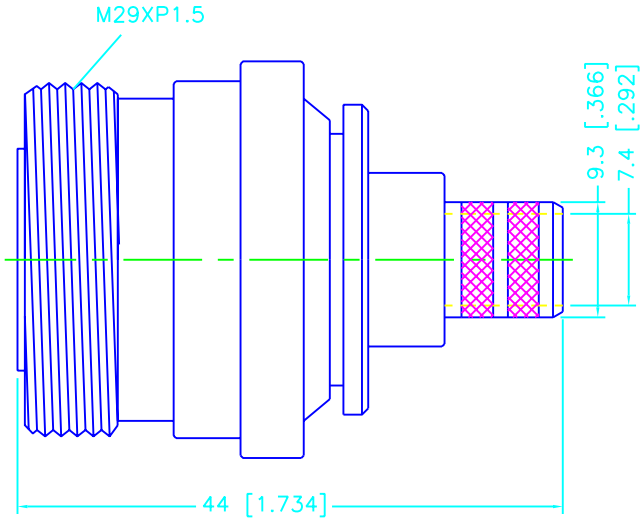

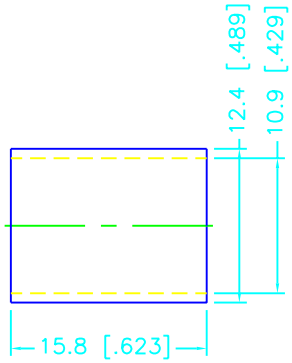

NOTES: FINISH (PLATING THICKNESS IN MICRO-INCHES)

1. BRASS PER QQ-B-626
2. SILVER PL. 120 MIN. THICK OVER COPPER STRIKE
3. BERYLLIUM COPPER PER QQ-C-530.
4. SILVER PL. 200 MIN. THICK OVER COPPER STRIKE
5. TEFLON MIL-P-19468

	DESCRIPTION	MATERIAL	FINISH
1	BODY	BRASS	SILVER
2	INSULATOR	TEFLON	NATURAL
3	CONTACT PIN	BER. COPPER	SILVER
4	FERRULE	COPPER	SILVER
5	COVER	PE	BLUE
6			
7			
8			

UNLESS OTHERWISE SPECIFIED DIMENSIONS ARE IN MILLIMETERS

DIMENSIONS IN [ ] ARE IN INCHES FOR CUSTOMER REFERANCE ONLY

UNLESS OTHERWISE SPECIFIED TOLERANCES FOR MILLIMETERS ARE:

0.5-6 = ± 0.2
6-30 = ± 0.4
30-120 = ± 0.6
120-315 = ± 1
315-1000 = ± 1.6
1000-2000 = ± 2.4

DO NOT SCALE DRAWING

APPROVALS		DATE
DRAWN	G.R.S.	12/29/00
CHECKED		
ISSUED		

Connex Connector Corporation

TITLE 7/16 CRIMP PANEL JACK (FOR LMR400, BELDEN 9913 CABLE)

SIZE	FSCM NO.	DWG. NO.	REV.
A	99001	272123.DWG	A

SCALE	NA	PART NO.	272123	SHEET	1 OF 1