THIRD ANGLE PROJ.

REVISIONS				
REV	DESCRIPTION	DATE	ECO	APPR
A	RELEASE TO MFG.	9/4/14	50043	BCG

NOTES:

1. ELECTRICAL:
   - A. IMPEDANCE: 50Ω (NOMINAL)
   - B. FREQUENCY RANGE: DC-3.0 GHz
   - C. CONTACT RESISTANCE: CENTER: 20mΩ MAX.: MEASURED AT 10mA MAX. 25 mΩ MAX AFTER CYCLING
     OUTSIDE: 10mΩ MAX. 15 mΩ MAX AFTER CYCLING
   - D. INSULATION RESISTANCE: 500MΩ MIN.: MEASURED AT 100 VDC.
   - E. D.W.V.: NO LINE OR INSULATION BREAKDOWN: 200 VAC FOR 1 MIN.
   - F. VSWR: 1.300 MAX. (DC TO 3.0 GHz)
   - G. TYPICAL INSERTION LOSS : [0.00178 x (L in mm) x $\sqrt{\text{Freq. in GHz}}$] + [0.078 x $\sqrt{\text{Freq. in GHz}}$]
2. PHYSICAL:
   - A. FEMALE CONTACT HOLDING FORCE: 0.15N MIN. : MEASURED WITH A ∅0.475mm PIN GAUGE.
   - B. DURABILITY: 30 CYCLES
   - C. TEMPERATURE RANGE: -40°C TO +90°C.
   - D. AMC CONNECTOR MATING FORCE: 15N TYPICAL
   - E. AMC CONNECTOR DEMATING FORCE: 10N TYPICAL - 20N MAX
   - F. AMC INTERFACE IS FULLY COMPATIBLE WITH "U.FL" SERIES PRODUCT.
3. MATERIALS AND FINISHES (in micrometers):

   CONNECTOR BODY: PHOSPHOR BRONZE, SILVER PLATED (0.76u MIN.) OVER COPPER (1-2u)
   CONNECTOR CENTER CONTACT: PHOSPHOR BRONZE, GOLD PLATED (0.13u MIN.) OVER NICKEL (2-3u)
   CONNECTOR INSULATOR: HIGH TEMP PLASTIC UL 94V-0, BLACK
   CABLE JACKET: FEP
   CABLE DIELECTRIC: FEP
   CABLE CENTER CONDUCTOR: ANNEALED COPPER WIRE STRANDED, SILVER PLATED
   CABLE OUTER CONDUCTOR: ANNEALED COPPER WIRE BRAID, TIN PLATED
4. PACKAGING:
   - A. BAGS OF 100 PIECES

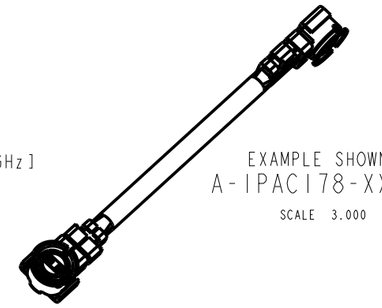

EXAMPLE SHOWN:
A-1PAC178-XXXN2
SCALE 3.000

CABLE ASSEMBLY TOLERANCES		
OVERALL LENGTH L (mm)	STANDARD TOLERANCE (mm)	ANGULAR TOLERANCE ± □°
50<L<100	± 4	± 30°
101 < L 200	± 4	± 45°
201 < L 500	± 8	± 45°
501 < L 1000	± 12	± 45°
1001 < L	±1.5 %	± 45°

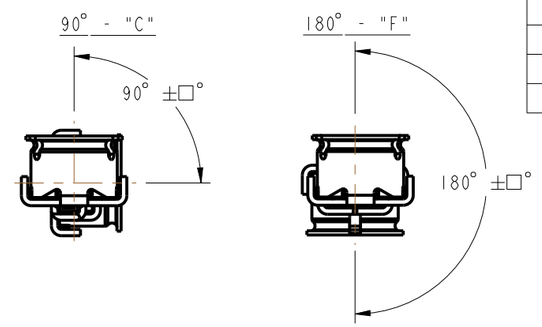

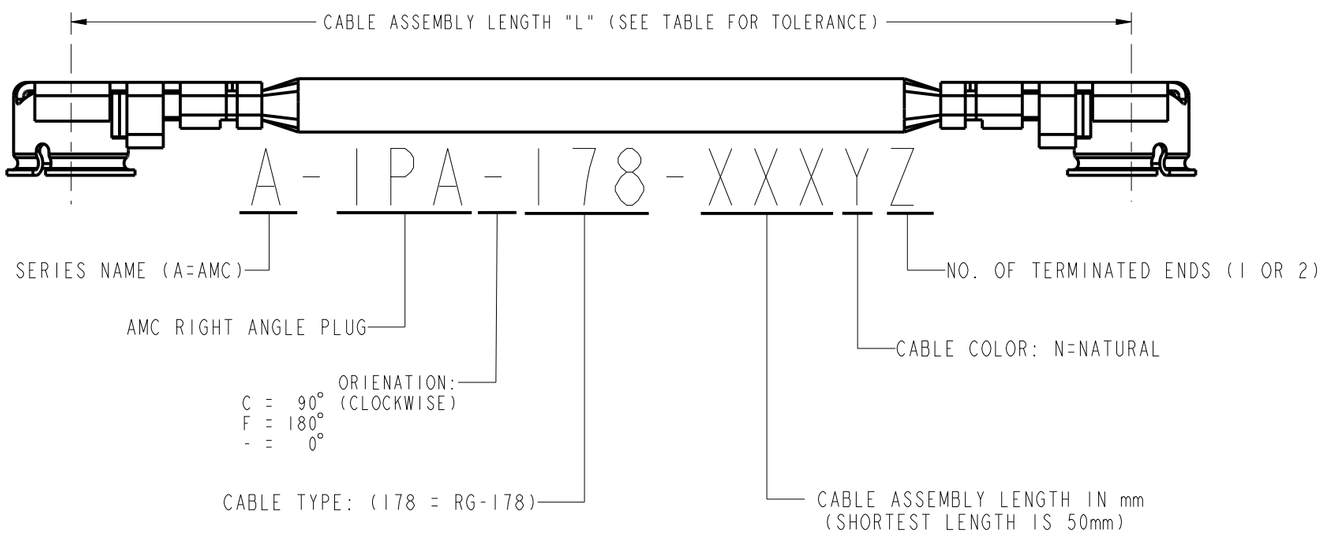

AMC RIGHT ANGLE PLUG DETAILS

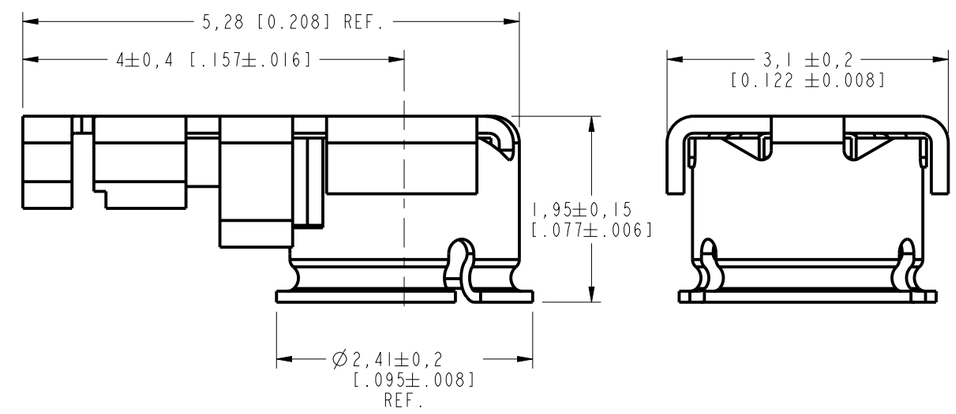

CUSTOMER OUTLINE DRAWING

ALL OTHER SHEETS ARE FOR INTERNAL USE ONLY

UNLESS OTHERWISE SPECIFIED, DIMENSIONS ARE IN METRIC AND TOLERANCES ARE:

<0.5mm	0.5 - 6mm	6 - 30mm	30 - 120mm	ANGLES
± 0.05mm	±0.1mm	±0.2mm	± 0.3mm	±1°

NOTICE - These drawings, specifications, or other data (1) are, and remain the property of Amphenol corp. (2) must be returned upon request; and (3) are confidential and not to be disclosed to any person other than those to whom they are given by Amphenol Corp. the furnishing of these drawings, specifications, or other data by Amphenol Corp., or to any other person to anyone for any purpose is not to be regarded by implication or otherwise in any manner licensing, granting rights to permitting such holder or any other person to manufacture, use or sell any product, process or design, patented or otherwise, that may in any way be related to or disclosed by said drawings, specifications, or other data.

MATERIAL
-
-

REFERENCE
EAR # 6093 AND

CONFIGURATION LEVEL: In Work

FINISH

DRAWN B.C. GLEISSNER	DATE 21-May-14	
ENGINEER E WANKOFF	DATE 19-May-14	
APPROVED K. CAPOZZI	DATE 8/28/14	
CAD FILE		

TITLE
CABLE ASSY
AMC, PLUG

SCALE: 8.0:1.0 | SHEET 2 OF 2

DWG SIZE B | REV A

Amphenol RF
www.amphenolrf.com

DRAWING NO. A-1PA-178-XXXYZ
ITEM NO. A-1PA-178-XXXYZ
PART NO. A-1PA-178-XXXYZ