SHELL SIZE	CONTACTS SIZE	CONTACTS PART NO.
6/18	20 PIN	10-195927-206
	20 SOCKET	10-195928-206
20/24	20L PIN	10-195925-206
	20L SOCKET	SEE NOTE 9
6/18	16 PIN	10-247920-168
	16 SOCKET	10-247922-168
20/24	16L PIN	10-247924-167
	16L SOCKET	10-247926-167

ACCESSORIES

(NOT PART OF STANDARD ASSEMBLY)

SEE DRAWING 10-150000

72500-81

REVISIONS				
ZONE	LTR	DESCRIPTION	DATE	APPROVED
—	A	—	—	—
	B	(CLII) REPLACED 10-497547-06F W/ 10-497547-6FF ECN: A3909	4/25/08	BROOKER

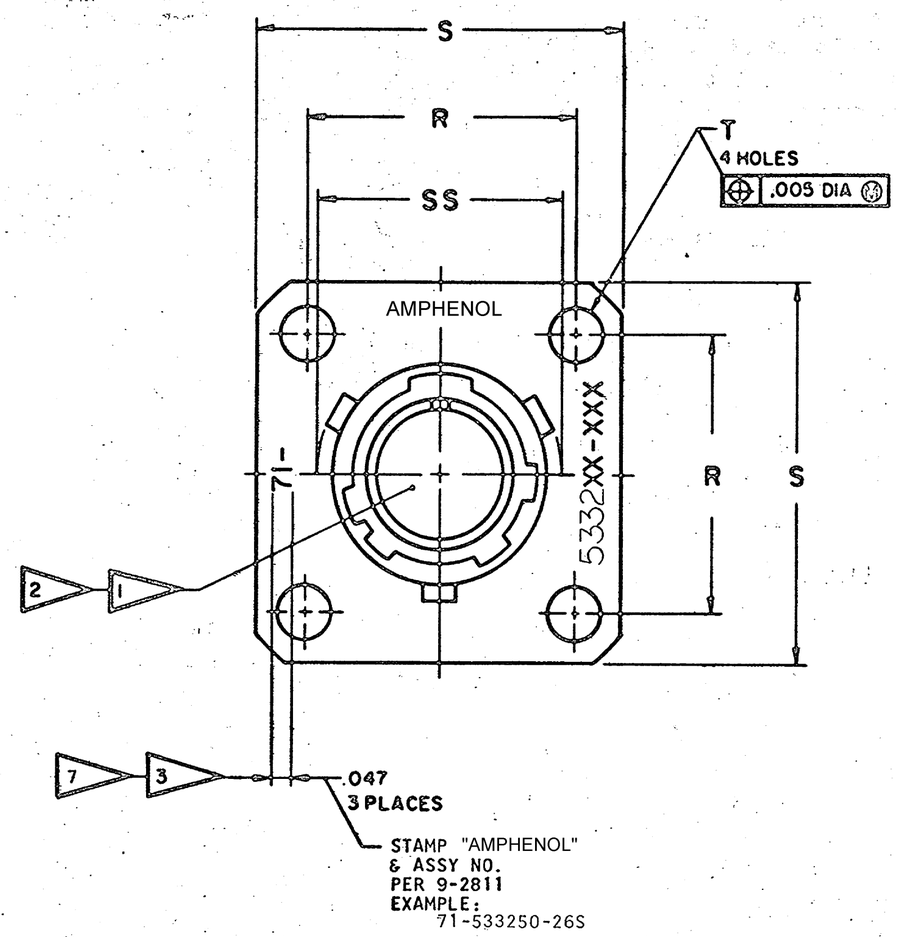

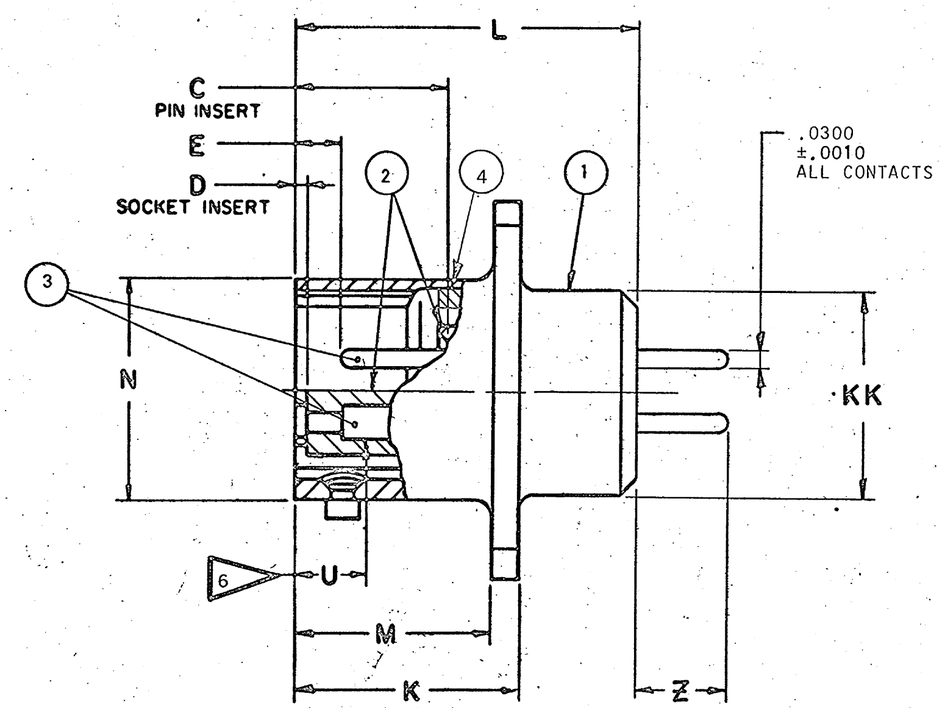

FIND NO.	QTY REQD	CODE IDENT	PART NUMBER	DESCRIPTION	NOTE REF
4	1		10-330914-XX1	GASKET	9
3	SEE P/L		SEE CHART	CONTACTS	
2	1		10-101806-()S/850-()S OR	INSERT, SOCKET	9
			10-101806-()P/-850-()P	INSERT, PIN	
1	1		10-150902-XX3	SHELL	9

PARTS LIST

UNLESS OTHERWISE SPECIFIED
LINEAR DIMENSIONS ARE IN INCHES. TOLERANCES: .XXX ± .010, .XX ± .03, .X ± .1, ANGLES ± 2°. OTHER STANDARDS PER 9-3800 AND MIL-D-1000. NOTE REF

SIGNATURES	DATES
PREPARED WILKINSON	9/18/79
CHECKED Johnson	4/16/80
MATERIAL	
APPROVED J. Walburn	4/16/80
APPROVED	4/17/80

MATERIAL SPEC

PROCESS SPEC
TEST 9-3980-1
ASSY 9-3605
9-2437-1
9-2811

AMPHENOL CORPORATION
40-60 DELAWARE AVE.
SIDNEY, NY USA

TITLE: CONNECTOR, ELECTRICAL RECEPTACLE, TYPE PT-E()FB, PCB, OLIVE DRAB

U

SIZE	CODE IDENT NO.	
C	77820	71-533245 THRU 71-533259

SCALE NONE | WT. | REF 71-148206/50 | SHEET 1 OF 2

USE OF THIS DOCUMENT IS UNLIMITED. DOCUMENTS REFERENCED HEREON CONTAIN LIMITED RIGHTS DATA.

NEXT ASSEMBLY

000000001

CN

TAB.

71-533245/59

BCAD Drawing, Apr 25, 2008 4:40:52 PM

ASSEMBLY NUMBER	PT. NO. REF	C +.010 -.025	D +.010 -.025	E +.010 -.020	K +.021 -.010	L ±.031	M +.010 -.000	N DIA +.001 -.005	R	S	T ±.005	U MAX	Z MAX	KK DIA +.011 -.000	SS +.000 -.016
71-533245-	02E- 6-	.337	.025	.085	.493	.743	.431	.348	.469	.688	.120	.153	.494	.312	.439
71-533246-	- 8-							.473	.594	.812				.438	.563
71-533247-	-10-							.590	.719	.938				.562	.680
71-533248-	-12-							.750	.812	1.031				.688	.859
71-533249-	-14-							.875	.906	1.125				.812	.984
71-533250-	-16-							1.000	.969	1.219				.938	1.108
71-533251-	-18-							1.125	1.062	1.312				1.062	1.233
71-533252-	-20-	.399	.087	.147	.650	.994	.556	1.250	1.156	1.438		.215	.453	1.188	1.358
71-533253-	-22-				.650	.994	.556	1.375	1.250	1.562			.453	1.312	1.483
71-533254-	-24-		NOT AVAILABLE		.683	1.027	.589	1.500	1.375	1.688	.147		.420	1.438	1.610
71-533255/59															

5

5. TO COMPLETE ASSEMBLY NUMBER & PT NO. REF, ADD APPLICABLE INSERT ARRANGEMENT SUFFIX TO BASE NUMBERS LISTED ABOVE PER 9-2437-1.

4. FOR MATING PLUG ASSEMBLY, SEE DRAWING 71-148606/50 & OTHERS.

3. SEE WORK ORDER FOR PERMISSIBLE ADDITIONAL OR ALTERNATE STAMPING.

2. INSERTS & CONTACTS CANNOT BE REMOVED.

1. FOR CONTACT ARRANGEMENTS, SEE DRAWINGS L-15206-() THRU L-15250-().

9. SEE SEPARATE PARTS LIST FOR COMPONENT PART NUMBERS AND QUANTITIES.

8. UNITS ILLUSTRATED MEET THE MATERIAL & FINISH REQUIREMENTS OF MIL-C-26482.

7. STAMPING MAY BE ON EITHER SIDE OF FLANGE (ONE SIDE ONLY).

6. DISTANCE BETWEEN END OF SHELL & THE POINT AT WHICH A GAGE PIN, HAVING THE SAME BASIC DIAMETER AS THE MATING CONTACT & A SQUARE FACE, ENGAGES SOCKET CONTACT SPRING.

NOTES:

SIZE	CODE IDENT NO.	
C	77820	71-533245 THRU 71-533259

REV SYM A B

SCALE WT REF SHEET 2

TAB.

71-533245/59

OGILVIE PRESS, INC., BROOKLYN 17, N. Y. CURRENCY NO. 1401H 84478

BCAGEDrawing Apr 25 2008 04:52 PM