ENCLOSURE DRAWING (To convert to inches divide by 25.4.)

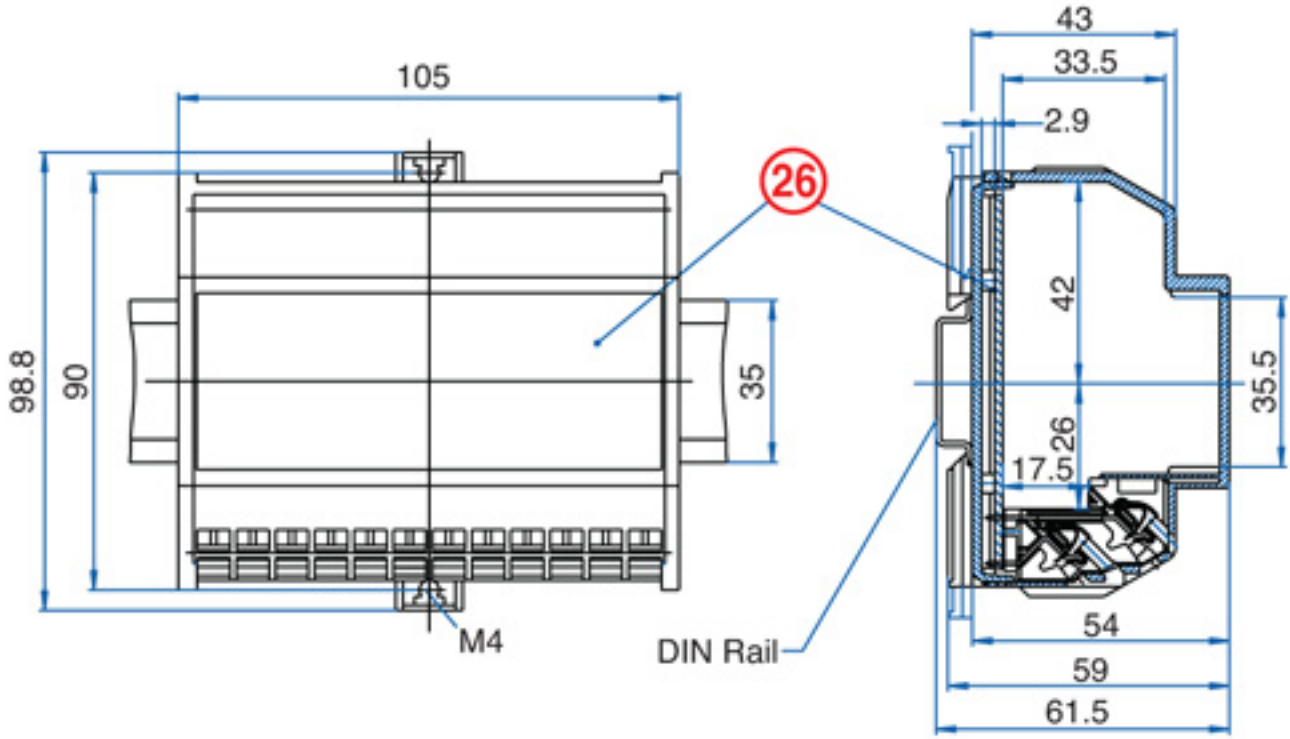

PCB DRAWING (To convert to inches divide by 25.4.)

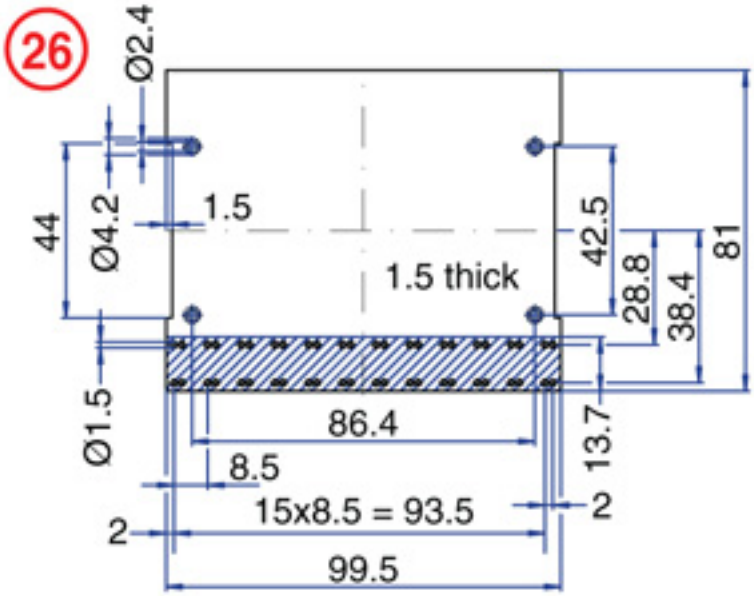

unused space