PIN	SD Mode
#1	DAT2
#2	DAT3/CD
#3	CMD
#4	V_{DD}
#5	CLK
#6	V_{SS}
#7	DAT0
#8	DAT1

Pin Assignments

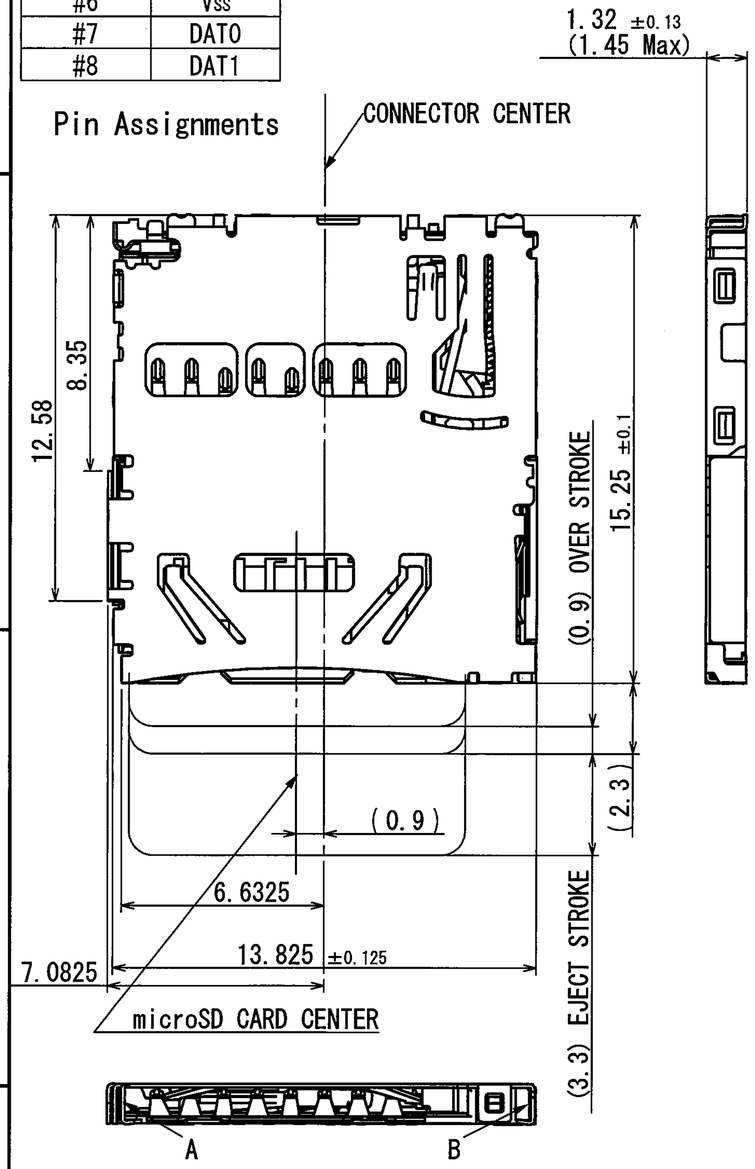

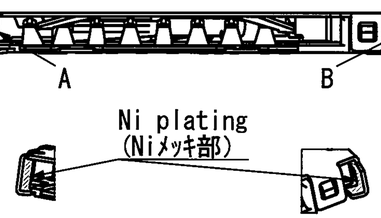

VIEW A VIEW B

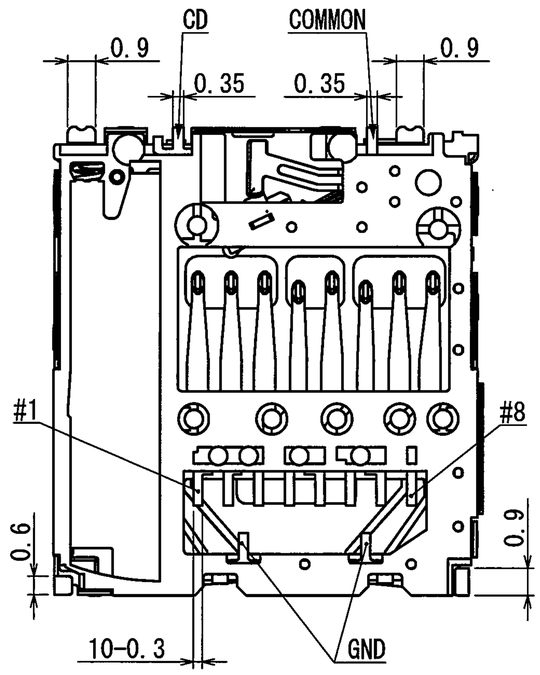

Circuit Diafram for Detect Switch

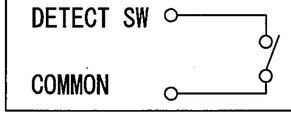

Insertiong CARD=ON
→Normal=OFF

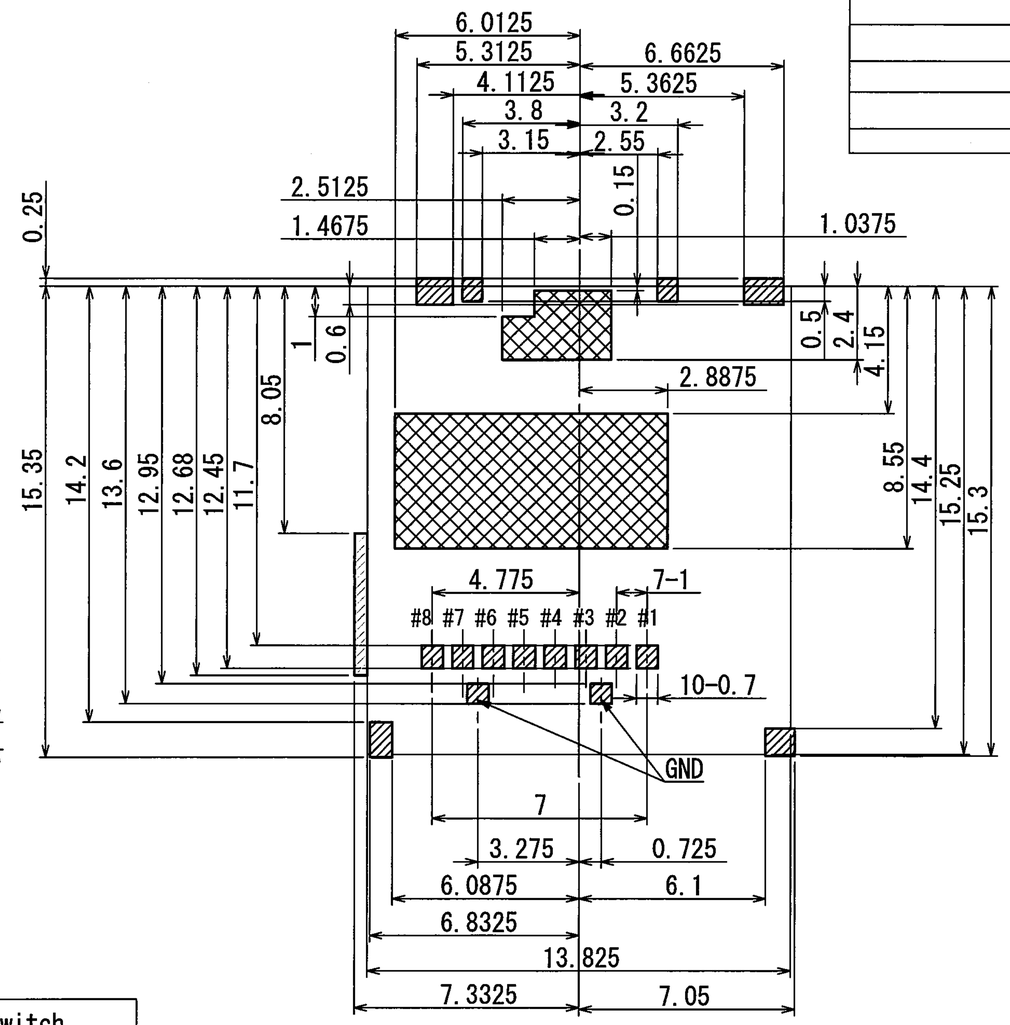

PATTERN AREA

NO PATTERN EXPOSED AREA

NO PATTERN AREA

RECOMMENDED P.C.BOARD LAYOUT
TOLERANCES UNLESS OTHERWISE SPEC. ±0.05

NOTE 1. This connector is standard mount type.
2. All terminal coplanarity : 0.1mm max. (INITIAL)

TOLERANCES UNLESS OTHERWISE SPEC	
BASIC DIMENSIONS	TOLERANCES
UP TO 10	±0.3
ABOVE 10 TO 100	±0.5
ABOVE 100	±0.8
ANGULAR DIMENSION	±5°

SYMB	DATE	APPD	CHKD	DSGD

背景
BACK GROUND
DSLJ14053

ALPS ELECTRIC CO., LTD.

DSGD. 06. Dec. 2014 Dai xuejuan	SCALE	NO. SCHA4B0419
CHKD. 06-Dec.-2014		TITLE PRODUCT DRAWING (1/2)
APPD. 06 Dec. 2014	UNIT mm	DOCUMENT NO. SCHA4B0419, AE12, 00

REEL CORE(1:5)

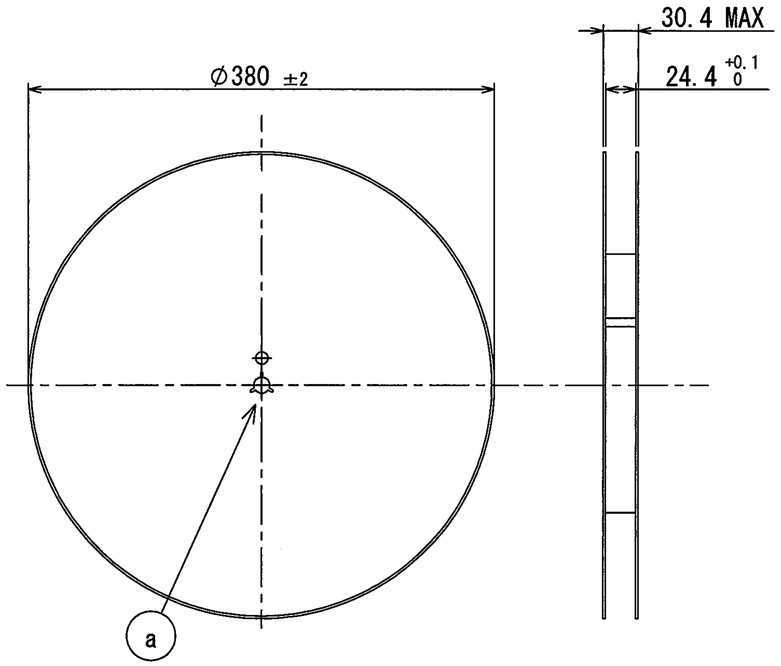

DETAIL (a) (1:1)

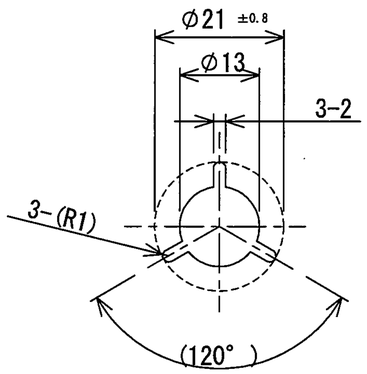

CARRIE TAPE(2:1)

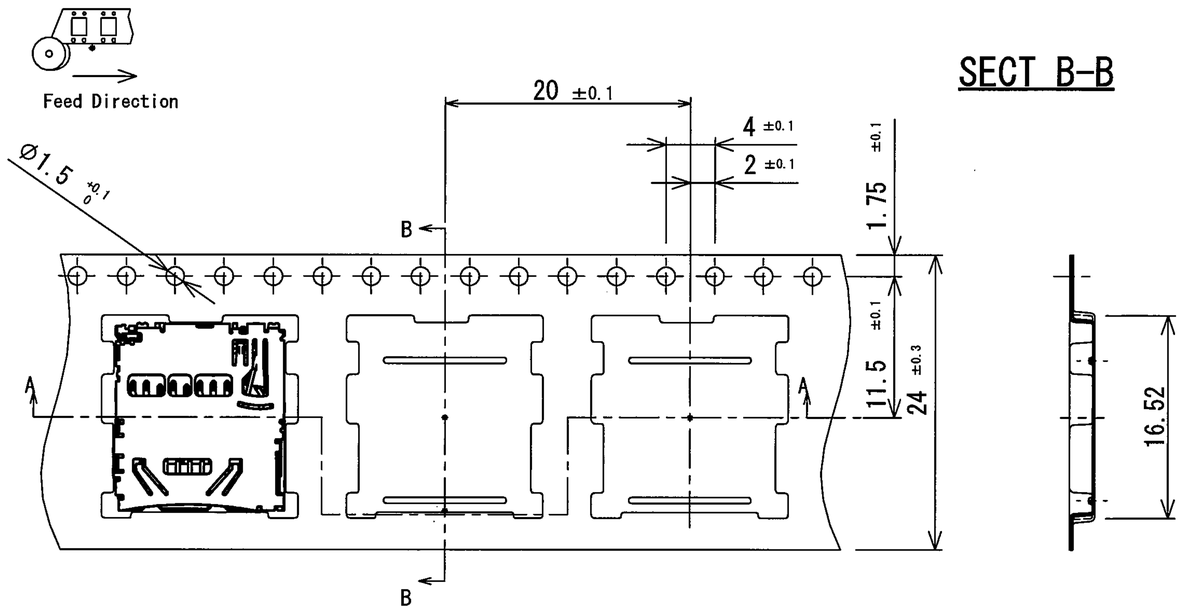

SECT B-B

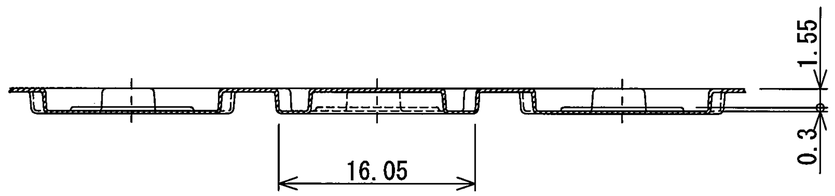

SECT A-A

2. 2000pcs/reel
1. SPECIFICATION OF TAPING:TAPE-S-029

NOTE

TOLERANCES UNLESS OTHERWISE SPEC	
BASIC DIMENSIONS	TOLERANCES
UP TO 10	±0.3
ABOVE 10 TO 100	±0.5
ABOVE 100	±0.8
ANGULAR DIMENSION	±5°

SYMB	DATE	APPD	CHKD	DSGD

ALPS ELECTRIC CO., LTD.

DSGD. 06. Dec. 2014 Dai xuejuan	SCALE	NO. SCHA4B0419	
CHKD. 06.Dec.2014		TITLE TAPING PRODUCT DRAWING (2/2)	
APPD. 06 Dec. 2014	UNIT mm	DOCUMENT NO. SCHA4B0419, AE22, 00	