SUB-ASSEMBLY PART NUMBER	NO.	PART NUMBER	PART NAME	MATERIAL	COLOR	QUANTITY
7288-9094-30	1	7188-9094-30	6P (2P YESC 1.5 + 2P YESC 2.8 + 2P YESC 6.3) SEALED MALE CONNECTOR HOUSING	PBT-GF15	BLACK	1
	2	7172-1495	6P (2P YESC 1.5 + 2P YESC 2.8 + 2P YESC 6.3) SEALED MALE CONNECTOR TPA	PBT-GF15	NATURAL	1

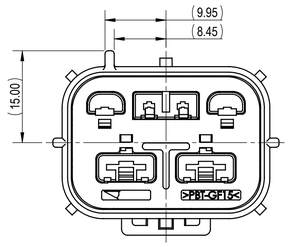

7288-9094-30
KEYWAY A

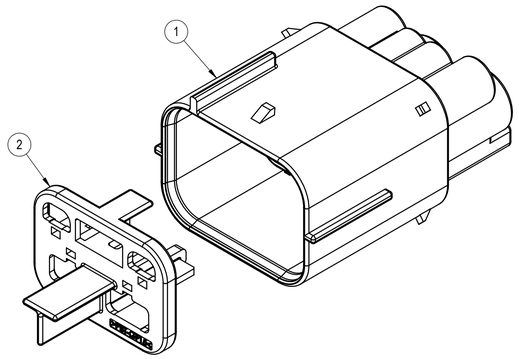

EXPLODED VIEW
(2/1)

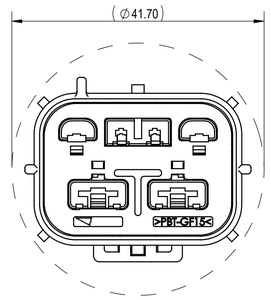

RECOMMENDED PASS-THROUGH
HOLE DIMENSION
(1mm CLEARANCE ALL AROUND)
(2/1)

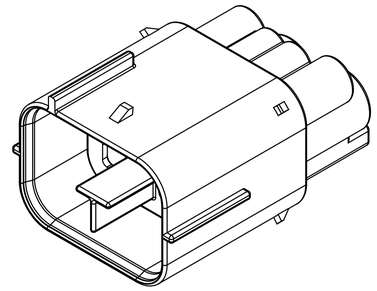

FRONT ISOMETRIC VIEW
(2/1)

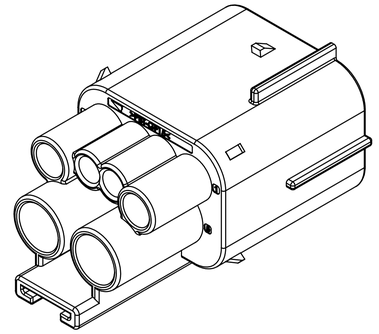

REAR ISOMETRIC VIEW
(2/1)

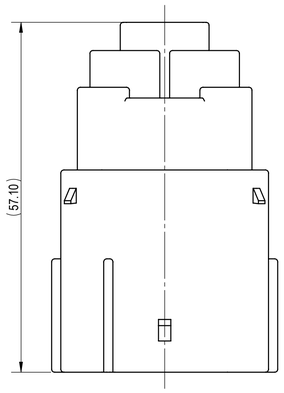

NOTES:

1. PARTS MUST BE PURCHASED FROM YAZAKI.
2. PARTS MUST BE FREE OF FLASH AND IMPERFECTIONS THAT AFFECT FUNCTION.
3. APPLICABLE TERMINAL: SEE 7114-4102-02:R DRAWING (1.5 YESC SEALED)
   MAX WIRE OD: 2.70mm (CAVITIES 2-3)
   MIN WIRE OD: 1.20mm (CAVITIES 2-3)
   SEE 7114-4150-02:R DRAWING (2.8 YESC SEALED)
   MAX WIRE OD: 3.80mm (CAVITIES 1,4)
   MIN WIRE OD: 1.20mm (CAVITIES 1,4)
   SEE 7114-4140-02:R DRAWING (6.3 YESC SEALED)
   MAX WIRE OD: 4.30mm (CAVITIES 5-6)
   MIN WIRE OD: 1.40mm (CAVITIES 5-6)
4. APPLICABLE WIRE SEAL: SEE 7158-3030-50:R DRAWING (1.5 YESC)
   SEE 7158-3111-60:R DRAWING (2.8 YESC)
   SEE 7158-3081-50:R DRAWING (6.3 YESC)
   SEE 7158-3084-40:RA DRAWING (6.3 YESC SEALED TERMINAL-10AWG)
5. APPLICABLE CAVITY PLUG: SEE 7158-3032-60:R DRAWING (1.5 YESC)
   SEE 7158-3114-90:R DRAWING (2.8 YESC)
   SEE 7158-3080-60:R DRAWING (6.3 YESC)
6. MATING PART NUMBER: 7289-9093-30, ETC.
7. PART SATISFIES TEST USCAR-2, REV. 6, FEBRUARY 2013, (T3/V2/S3/MF3)
8. PART TO COMPLY WITH YPES-31-038 REQUIREMENTS.
9. THIS DIMENSION SHOWS THE PRE-SET POSITION OF THE TPA.
10. THIS DRAWING IS TO BE USED FOR INTERNAL YAZAKI PSW SUBMISSION.
11. CLIP SLOT: 11mm CLIP SLOT. (BASED ON USCAR 11mm CLIP SLOT, EWCAP-005-11, REV C)
12. HANDLING MANUAL NUMBER: YPES-15-298E (1.5), YPES-15-299E (2.8), YPES-15-300E (6.3)
13. CONNECTOR IS CAPABLE OF ACCEPTING A DRESS COVER.

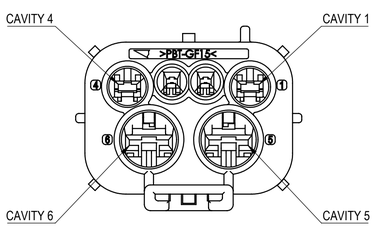

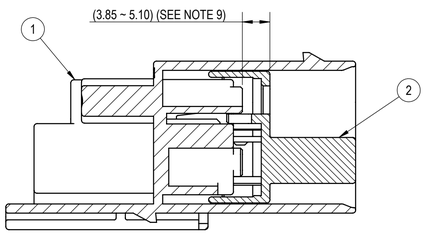

SECTION A-A

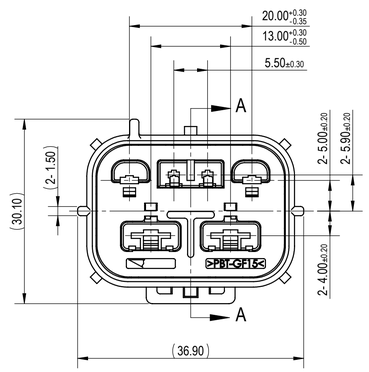

LET	DATE	REVISION RECORD	NO.	CHKD
1	04-14-2022	REMOVED TEST FAILURES	C22-A197	F.R.
-	08-23-2018	NEW	C18-A779	H.C.

GENERAL TOLERANCE

	10MAX	50MAX	100MAX	250MAX	250OVR	R5 MAX	R10 MAX	R20 MAX	R20 OVR	ANGLE	ECCENT
A	±0.15	±0.20	±0.30	±0.50	±0.75	±0.20	±0.30	±0.50	±2.50	±3°	0.1
B	±0.20	±0.30	±0.55	±0.95	±1.40					±3°	0.1
C	±0.30	±0.50	±0.80	±1.40	±2.00					±3°	0.15

SPECIFIED

MASS (20.2) g

DWG TYPE	DWG SOURCE	DWG DATE	UNIT	SCL	ANGLE
R	7288-9094-30:M 1	08-23-2018	mm	2/1	3

APPROVED	CHECKED	CHECKED	DESIGN	DRAWN
			ADRIAN WARGA KANE 01-10-2017	FERNANDA RASCON 04-14-2022

CUSTOMER
CUSTOMER PART NO. | CUSTOMER DWG NO.
OFFICE YNA | TRIAL PART NO.
VENDOR
VENDOR NO.

MATL. SPEC. SEE TABLE | TREAT. & FIN. N/A

NAME 6P (2Px1.5 + 2Px2.8 + 2Px6.3) YESC
SEALED MALE CONNECTOR SUB-ASSEMBLY

PART NO. / CH. CODE 7288-9094-30

DWG NO. 7288-9094-30:R

YAZAKI CORPORATION

ISSUE MARK