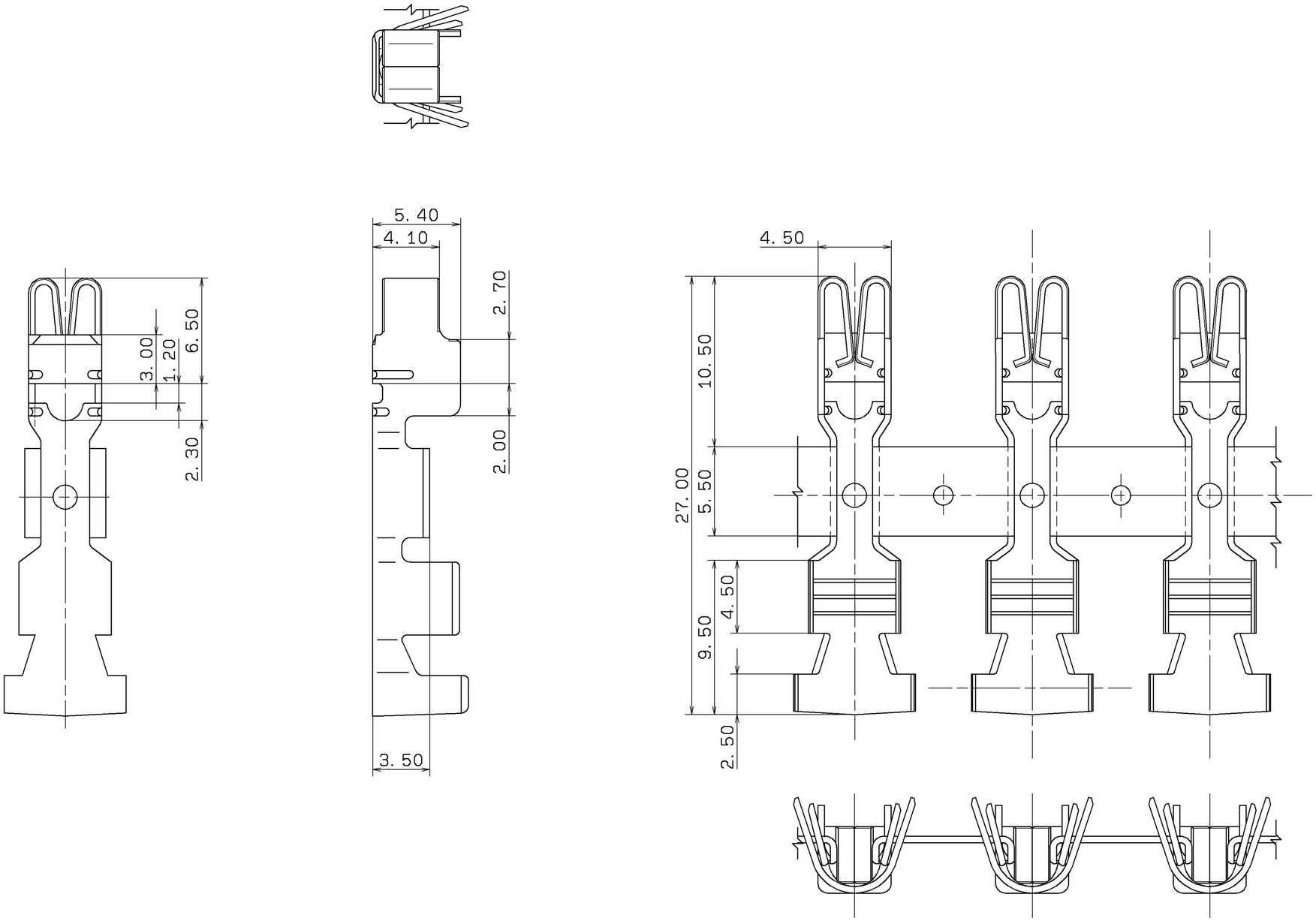

NOTE

APPLICABLE WIRE SIZE:AVS 3~5

注 記

適用電線サイズ:AVS 3~5

ISSUE MARK

	96. 01. 10	NEW	C96-3009	T. F
LET	DATE	REVISION RECORD	NO.	CHKD

GENERAL TOLERANCE

	10MAX	50MAX	100MAX	250MAX	2500VR	ANGLE	ECCENT
A	±0. 15	±0. 2	±0. 3	±0. 5	±0. 75	±30'	0. 1
Ⓑ	±0. 2	±0. 3	±0. 55	±0. 95	±1. 4	±30'	0. 1
C	±0. 3	±0. 5	±0. 8	±1. 4	±2	±30'	0. 15

SPECIFIED

MASS (0. 8) g

CUSTOMER				MATL. SPEC.	銅合金 T=0. 4	TREAT. & FIN.
CUSTOMER PART NO.		CUSTOMER DWG NO.		NAME	MINI FUSE TERMINAL	
OFFICE		TRIAL PART NO.				
VENDOR						
VENDOR NO.						
DWG TYPE	DWG SOURCE	DWG DATE	UNIT / SCL	ANGLE	PART NO.	7126-8862-02
R	NEW	96. 01. 10	mm / 5/1	3	CH. CODE	
APPROVED	CHECKED	CHECKED	DESIGN	DRAWN	DWG NO.	7126-8862-02:R
角田	青野		TSUCHIYA	T. FUJITA		
96. 01. 10	96. 01. 10	96. 01. 10	95. 12. 14	96. 01. 10	YAZAKI CORPORATION	