| YAZAKI PART NO. | PLATING |
|---|---|
| 7116-3050 | |
| 7116-3050-02 | TIN PLATING |

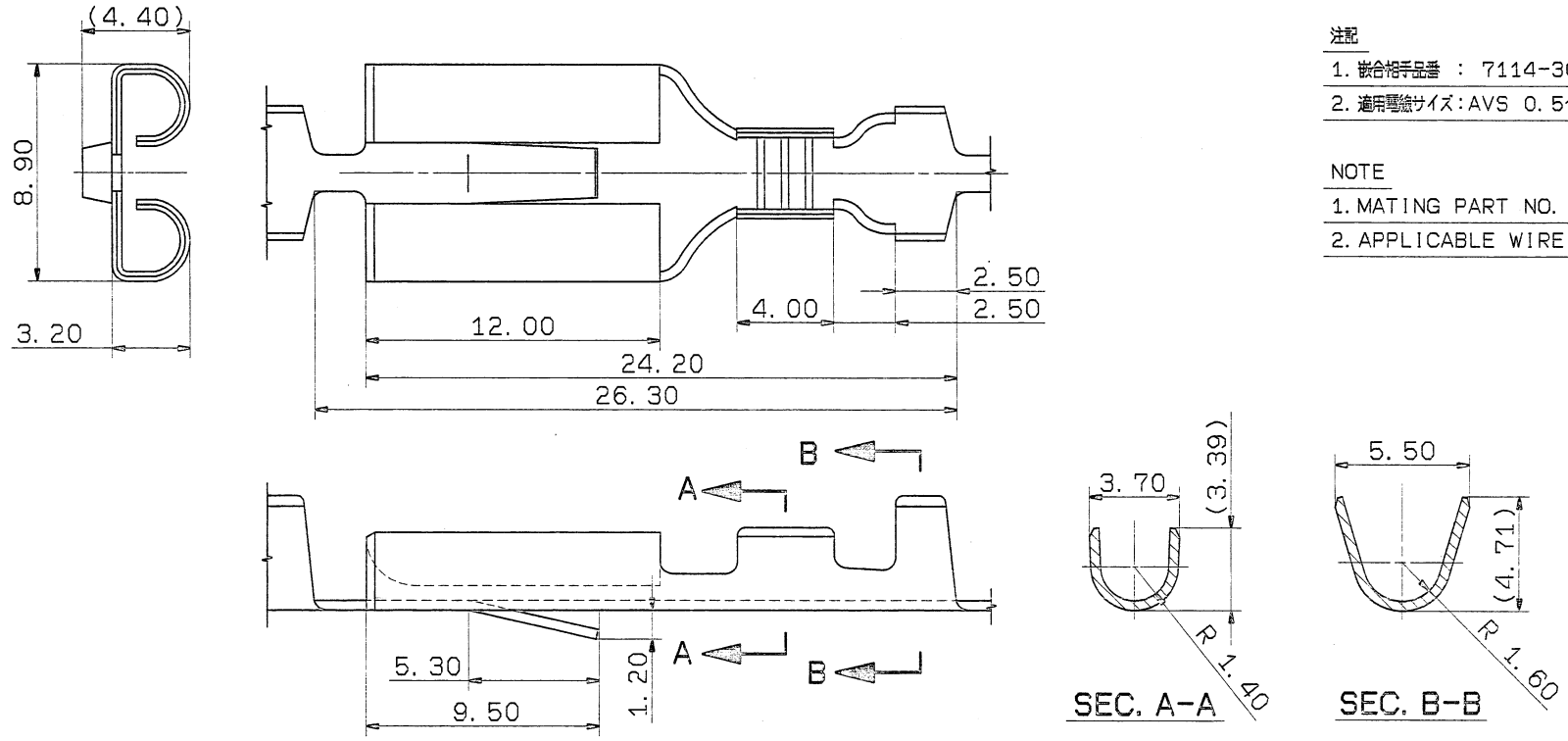


注記

1. 嵌合相手品番 : 7114-3030
2. 適用電線サイズ:AVS 0. 5~2. 0

NOTE

1. MATING PART NO. : 7114-3030
2. APPLICABLE WIRE SIZE:AVS 0. 5~2. 0

ISSUE MARK

| LET | DATE | REVISION RECORD | NO. | CHKD |
|---|---|---|---|---|
| | 95. 06. 07 | NEW | C95-L915 | K. O |

GENERAL TOLERANCE

| | 10MAX | 50MAX | 100MAX | 250MAX | 2500VR | ANGLE | ECCENT |
|---|---|---|---|---|---|---|---|
| A | ±0. 15 | ±0. 2 | ±0. 3 | ±0. 5 | ±0. 75 | ±30' | 0. 1 |
| B | ±0. 2 | ±0. 3 | ±0. 55 | ±0. 95 | ±1. 4 | ±30' | 0. 1 |
| Ⓒ | ±0. 3 | ±0. 5 | ±0. 8 | ±1. 4 | ±2 | ±30' | 0. 15 |

SPECIFIED

MASS g

| CUSTOMER | |
|---|---|
| CUSTOMER PART NO. | CUSTOMER DWG NO. |
| OFFICE | TRIAL PART NO. |
| VENDOR | |
| VENDOR NO. | |

| DWG TYPE | DWG SOURCE | DWG DATE | UNIT | SCL | ANGLE |
|---|---|---|---|---|---|
| R | NEW | 95. 06. 07 | mm | 5/1 | 3 |

| APPROVED | CHECKED | CHECKED | DESIGN | DRAWN |
|---|---|---|---|---|
| | | | TAKENOUCHI | SAMUKAWA |
| 95. 06. 13 | 95. 06. 09 | 95. 6. 9 | 81. 06. 05 | 95. 06. 07 |

MATL. SPEC. C2600 t=0. 4

TREAT. & FIN.

NAME 305(7. 8mm) TERMINAL FEMALE

PART NO. CH. CODE 7116-3050 ETC.

DWG NO. 7116-3050:R

YAZAKI CORPORATION