THIS DRAWING IS UNPUBLISHED. RELEASED FOR PUBLICATION -,- .
© COPYRIGHT - BY TYCO ELECTRONICS CORPORATION. ALL INTERNATIONAL RIGHTS RESERVED.

LOC	DIST
GP	00

REVISIONS

P	LTR	DESCRIPTION	DATE	DWN	APVD
	F	REVISED PER ECO-09-012339	26MAY2009	ZMR	SLB

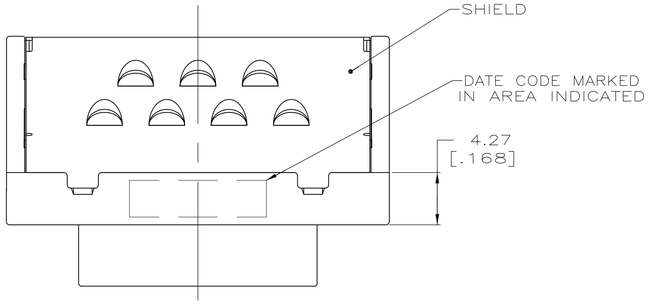

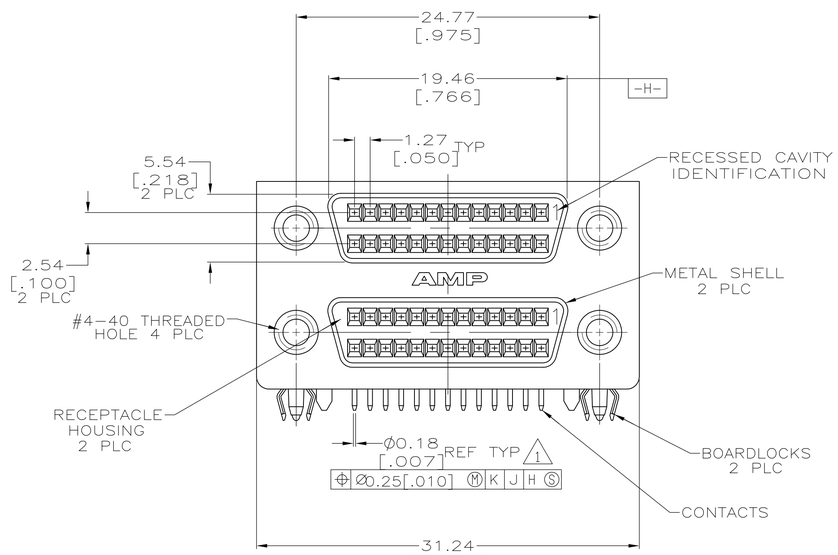

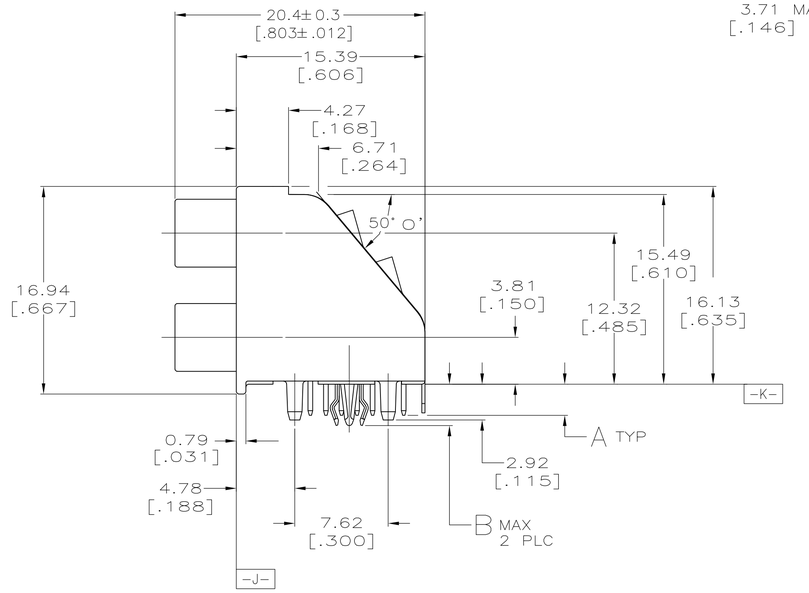

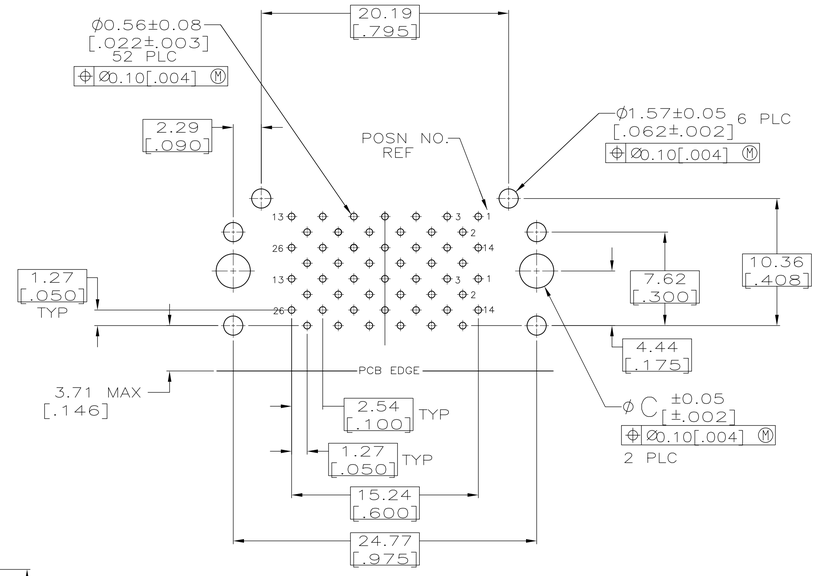

P.C.BOARD MOUNTING DIMENSIONS
CONNECTOR SIDE
PC BOARD THICKNESS = D ±0.20 [±.008]

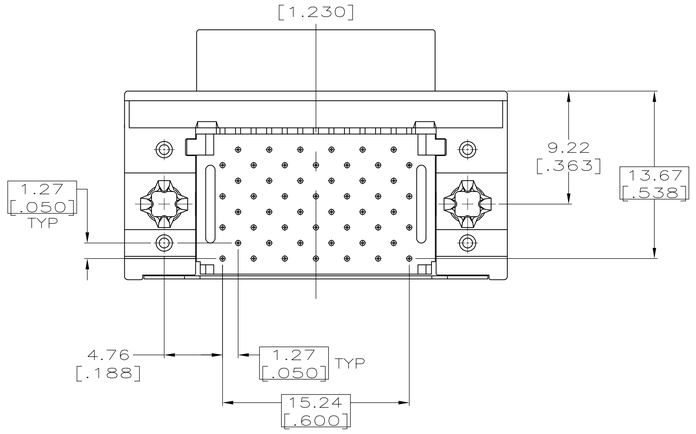

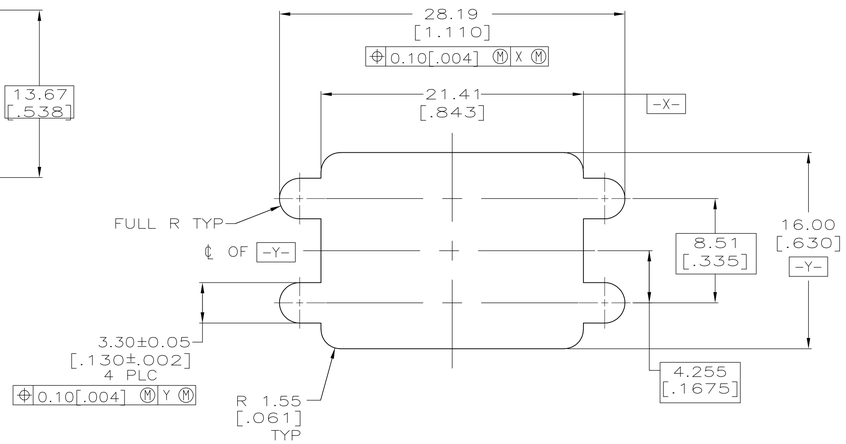

RECOMMENDED PANEL CUTOUT

1. POSITION TOLERANCE APPLIES AT TIP ONLY.

2. MATERIAL
CONTACTS: PHOSPHOR BRONZE.
RECEPTACLE HOUSING: UL 94V-0 RATED LCP, COLOR BLACK.
BRACKET: ZINC
SHELL: CARBON STEEL,
BOARDLOCKS: COPPER ALLOY
SHIELD: PHOSPHOR BRONZE.

3. FINISH
CONTACTS: .000762-.000889 [.000030-.000035] THICK GOLD ON MATING END, .003048-.007620 [.000120-.000300] THICK TIN-LEAD ON SOLDER LEAD, ALL OVER .001270-.002540 [.000050-.000100] THICK NICKEL.
SHELL: 0.00508-0.01016 [.000200-.000400] TIN OVER 0.00127-0.00254 [.000050-.000100] COPPER.
BRACKET: 0.00508-0.01016 [.000200-.000400] TIN-LEAD OVER 0.00508-0.00762 [.000200-.000300] COPPER.
BOARDLOCKS: 0.00508-0.01016[.000200-.000400] TIN-LEAD OVER 0.00127-0.00254 [.000050-.000100] NICKEL.
SHIELD: 0.00254-0.00635 [.000100-.000250] TIN.

D	C	B	A	PART NUMBER
2.36 [.093]	3.18 [.125]	4.52 [.178]	3.30 [.130]	750820-2
1.57 [.062]	2.77 [.109]	3.81 [.150]	2.54 [.100]	750820-1

THIS DRAWING IS A CONTROLLED DOCUMENT.

DIMENSIONS: mm [INCHES]

TOLERANCES UNLESS OTHERWISE SPECIFIED:
0 PLC ± -
1 PLC ± -
2 PLC ± 0.13 [.005]
3 PLC ± -
4 PLC ± -
ANGLES ± 2°

MATERIAL 2 FINISH 3

DWN John A. Root 05-30-91
CHK JOHN BROSCHARD 05-30-91
APVD R WHITEMAN 07-02-91

PRODUCT SPEC 108-1366
APPLICATION SPEC 114-40036
WEIGHT -

Tyco Electronics — Tyco Electronics Corporation, Harrisburg, PA 17105-3608

NAME: RECEPTACLE ASSEMBLY, SHIELDED, 52 POSN STACKED RIGHT ANGLE, AMPLIMITE .050 Series SLIMLINE

SIZE A1 | CAGE CODE 00779 | DRAWING NO C-750820 | RESTRICTED TO -

CUSTOMER DRAWING | SCALE 4:1 | SHEET 1 OF 1 | REV F

4805 (1/08)