Rating	3A
Insulation Resistance	DC 500V 100M ohm Min.
Dielectric Strength	AC 1500V 1 minute
Operation Temperature	-20°C~+80°C
Color	Red

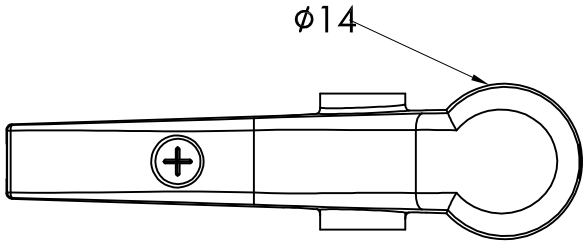

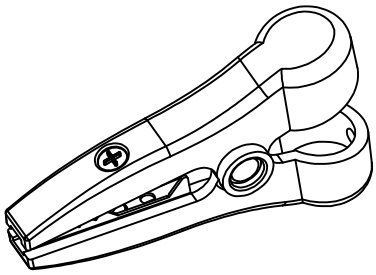

原稿
2021/06/11
研發部

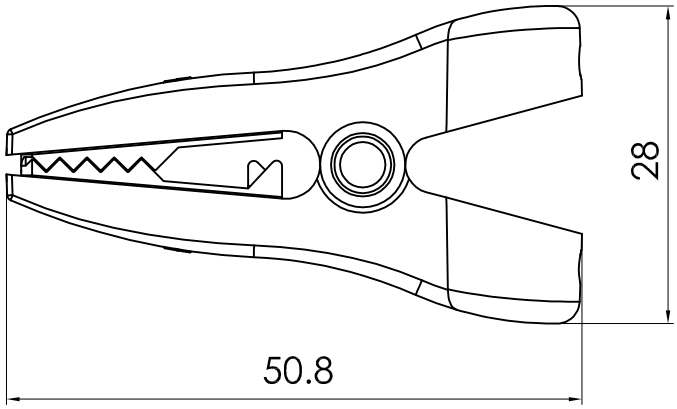

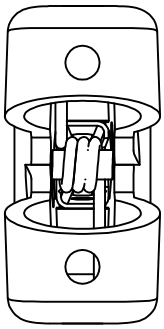

C8\R8\R8-122_1

							△
							△
Date	Name	Description					No.
Drawn	Checked	Approved	SCI BOM No.	1530071	Model Name	ALLIGATOR CLIPS	
袁浩徐	袁浩徐	李文生	Customer No.	112-R8-122-R	Model No.	R8-122	Rev. 0
06/01/'21	2021/06/08	2021/06/08	Unit	mm	Shin Chin Industrial Co., Ltd.		