Rating	1A 125VAC/ 0.5A 250VAC	Mounting Hole	Circuit Diagram
Contact Resistance	50m ohm Max.	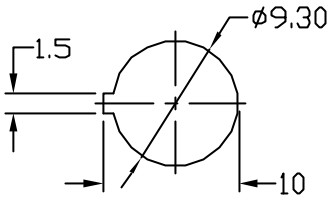	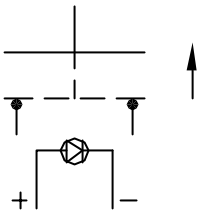 (2VDC)
Insulation Resistance	DC 500V 100M ohm Min.		
Dielectric Strength	AC 1000V 1minute		
Switch Function	2P SPST OFF-(ON) (LED)		
		THICKNESS 0.5~2.0mm	

*MATERIAL:
Frame: Black, PA#66+5%G
Actuator: Green, PC
Printed: None

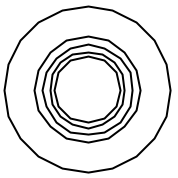

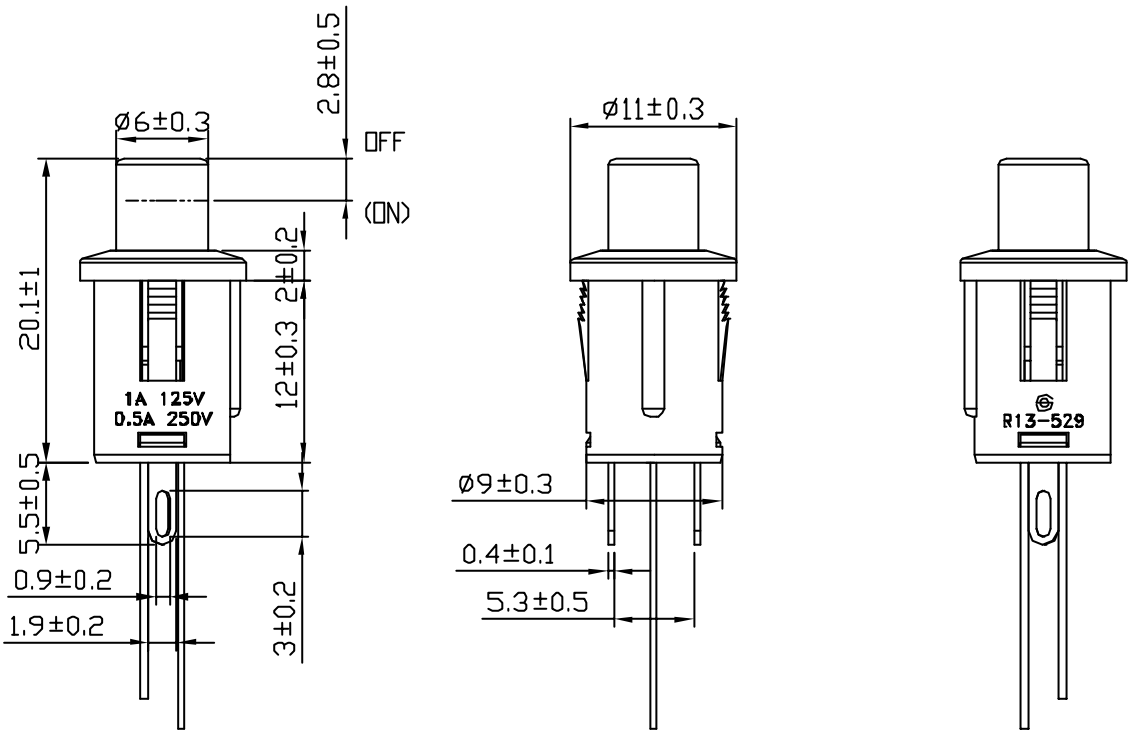

C8\R13\R13-529AL-05(1830804)

			△
			△
Date	Name	Description	NO

Drawn	Checked	Approved	SCI BOM NO.	1830804	Model Name	PUSH SWITCH	
曹盈芳	王佰山	李景煌	Customer No.	112-R13-529AL-BGG	Model No.	R13-529AL-05	REV. 0
02/17/'09	02/18/'09	02/19/'09	Unit	mm	SHIN CHIN INDUSTRIAL CO., LTD.		