| Rating | 1A 125VAC/ 0.5A 250VAC | Mounting Hole | Circuit Diagram |
|---|---|---|---|
| Contact Resistance | 50m ohm Max. | 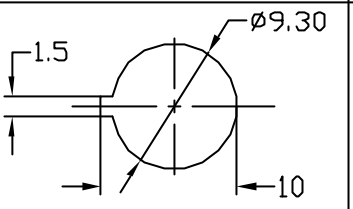 | 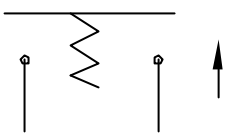 |
| Insulation Resistance | DC 500V 100M ohm Min. | | |
| Dielectric Strength | AC 1000V 1minute | | |
| Switch Function | 2P SPST OFF-(ON) | | |
| | | THICKNESS 0.5~2.0mm | |



*MATERIAL:
Frame: Black, PA#66+5%G
Actuator: Red, PC, No limpid
Printed: None

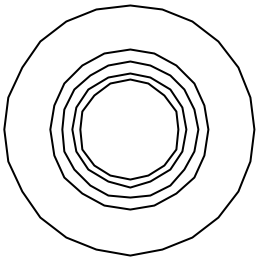

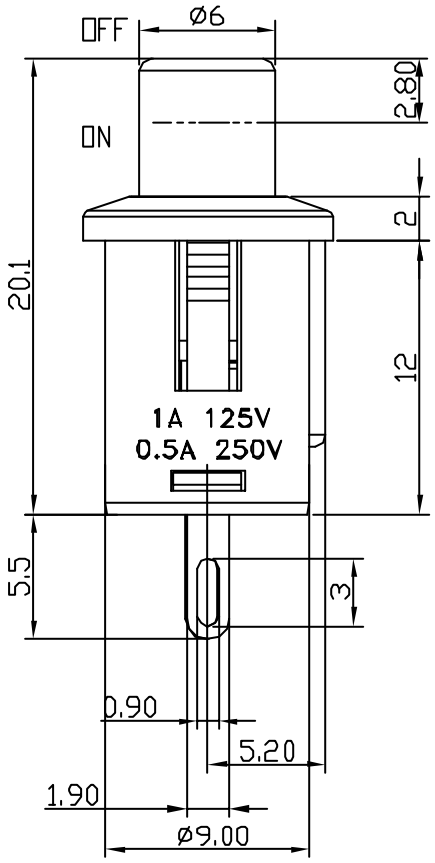



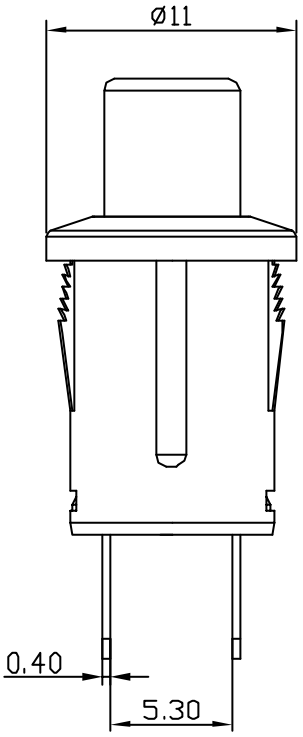



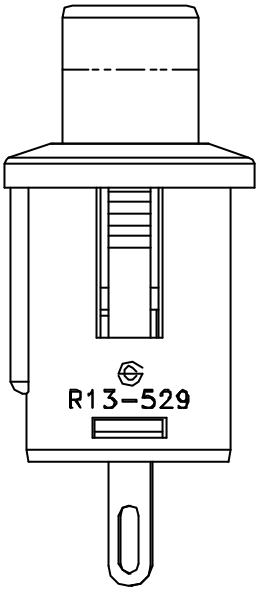



C8\R13\R13-529A-05(1830801)

| | | | |
|---|---|---|---|
| | | | △ |
| | | | △ |
| Date | Name | Description | NO |

| Drawn | Checked | Approved | SCI BOM NO. | 1830801 | Model Name | PUSH SWITCH | |
|---|---|---|---|---|---|---|---|
| 曹盈芳 | 王佰山 | 李景煌 | Customer No. | 112-R13-529A-BR | Model No. | R13-529A-05 | REV. 0 |
| 02/17/'09 | 02/18/'09 | 02/19/'09 | Unit | mm | SHIN CHIN INDUSTRIAL CO., LTD. | | |