Rating	Operating voltage:7V~33V DC +/- 2% (0.24V @ 12V, 0.48V @ 24V) Measuring Voltage:7-33V Long time use suggestion to 0~70A MeasuringCurrentrange:0~100.0A ±3%10A:±0.3A,50A:±1.5A,100A:±3.0A LED digital display. Reverse polarity protection.Surge protection up to 400W/36V
Insulation Resistance	DC 500V 100MΩ Min.
Operating Temperature	-20℃~50℃

Mounting Hole

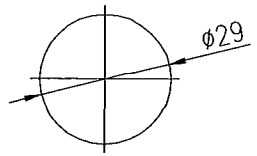

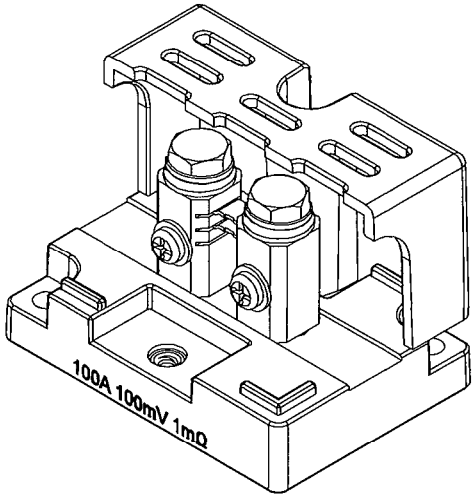

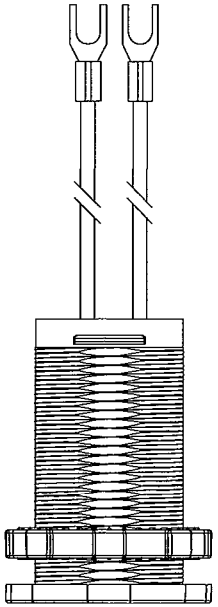

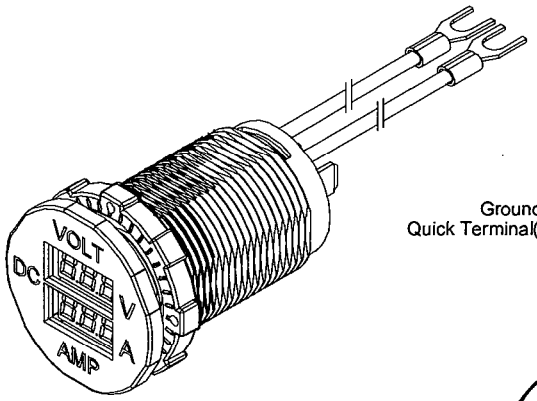

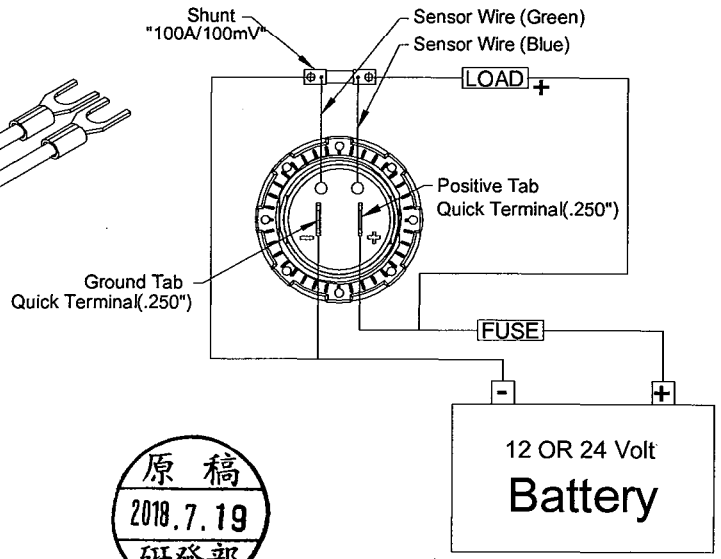

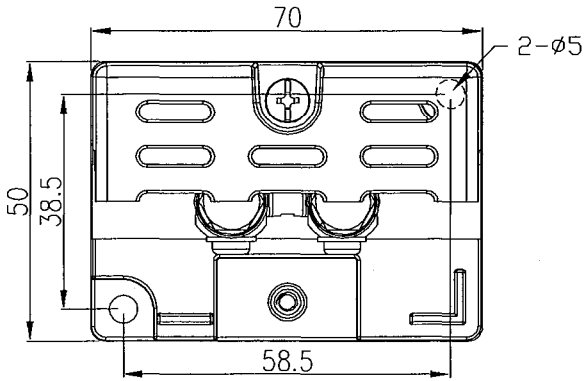

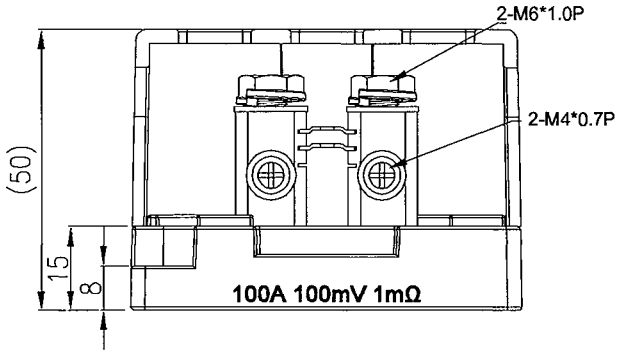

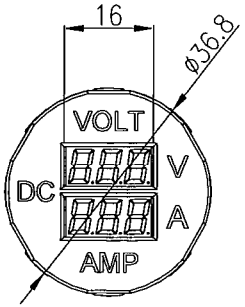

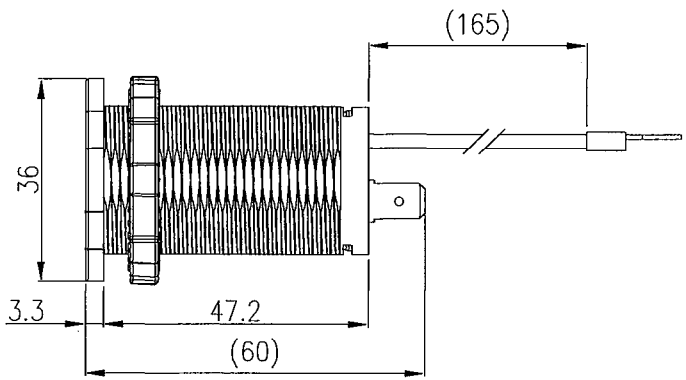

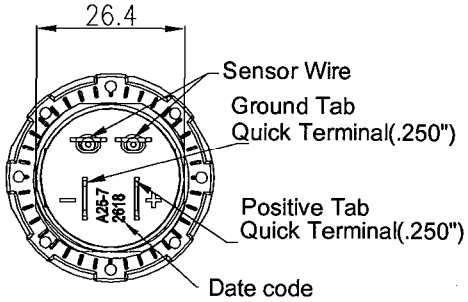

原稿
2018.7.19
研發部

Tolerances ±0.5 Unless Otherwise Specified

for SCI

Date	Name	Description	No.
			△
			△

Drawn	Checked	Approved	SCI BOM No.	1570034	Model Name	DC Volt / Amp meter	
Rock Hsu			Customer No.	112-A25-7-BB3-R	Model No.	A25-7-BB3-R	Rev.
06/26/"18		06/26/18	Unit	mm	Shin Chin Industrial Co., Ltd.		0